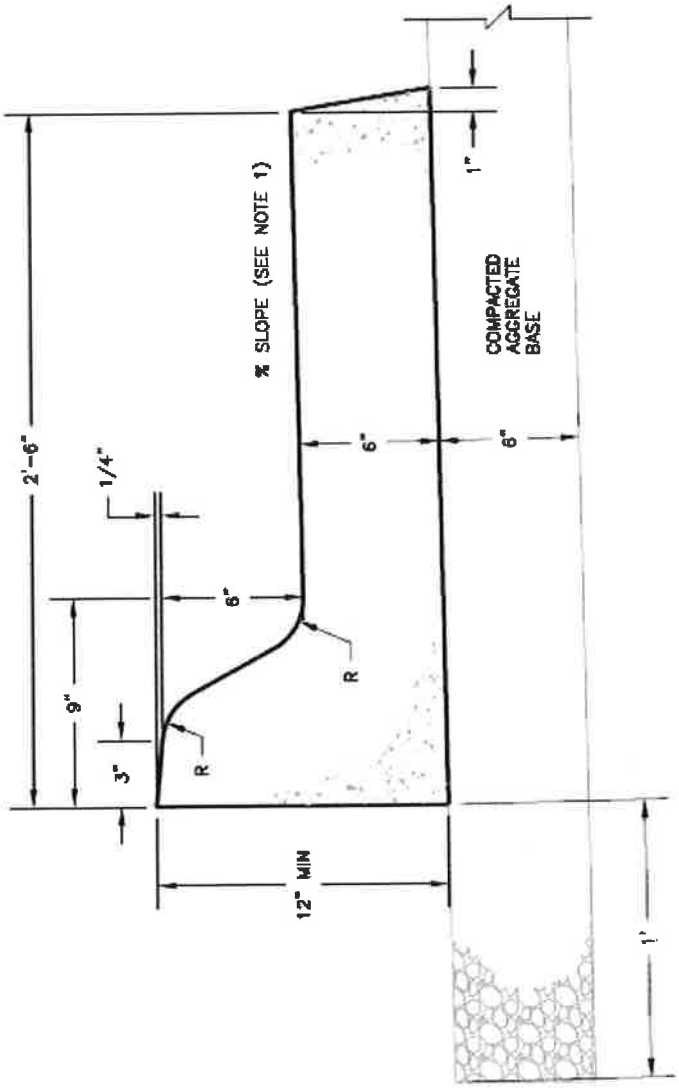


NOTES:
1. NORMAL SLOPE SHALL BE 2.5% AND MAY VARY WITH THE CITY ENGINEER'S APPROVAL.
2. R = 2 1/2"

# MOUNTABLE CURB AND GUTTER

CITY OF HERMISTON

STANDARD PLAN

ST01

APPROVED: _____ CITY ENGINEER

DATE:

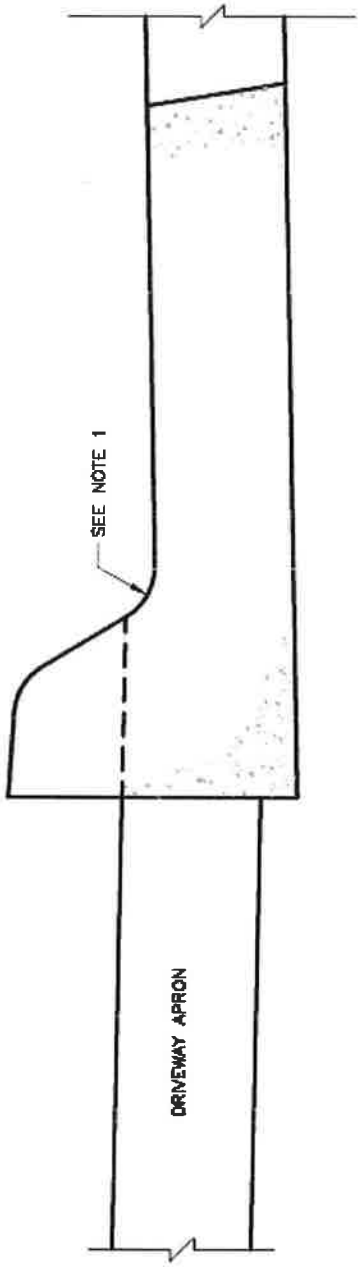


NOTES:
1. PROVIDE 1/2" TO 3/4" LIP AT DRIVE.

# CURB CUT FOR DRIVEWAYS

CITY OF HERMISTON

STANDARD PLAN

ST02

APPROVED: _____

CITY ENGINEER

DATE:

NOTES

1. CONCRETE SPLASH PAD NECESSARY WHERE WATER ENTERS AND/OR EXITS FACILITY.
2. CURB & GUTTER PER CITY OF HERMISTON STD PLAN NO 2-01-1
3. TAPERED RELIEF SHALL ONLY OCCUR AT LOCATION OF CURB OPENINGS. ALL OTHER CURB RELIEF SHALL BE PER CITY STANDARD PLAN NO. 2-01-1
4. CITY TO INSPECT CONSTRUCTION OF CURB CUTS AT TIME OF INSTALLATION.
5. INLETS SHALL BE SPACED EVERY 20 FEET UNLESS OTHERWISE APPROVED BY THE CITY

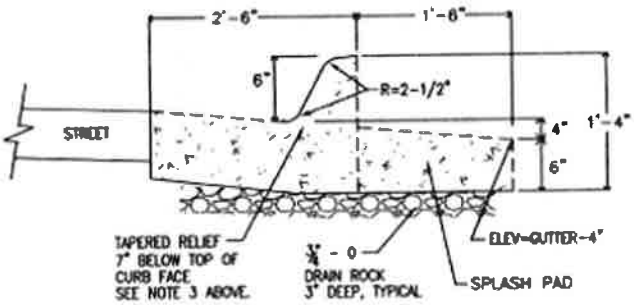


SECTION

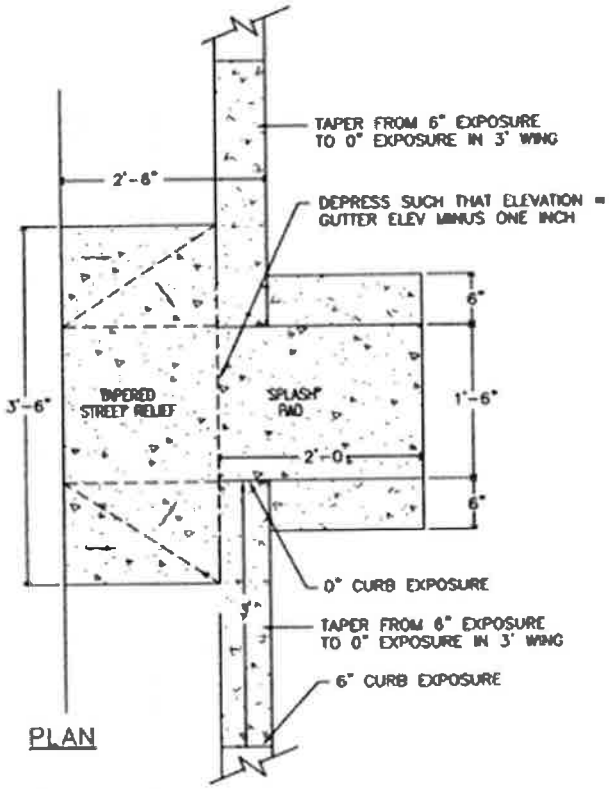


PLAN

# CURB CUT DETAIL

NTS

| CURB CUT FOR DRAINAGE SWALE | |
|---|---|
| CITY OF HERMISTON | STANDARD PLAN ST02-1 |
| APPROVED: _____ CITY ENGINEER DATE: | |

# PRINCIPAL ARTERIAL CROSS SECTION

CITY OF HERMISTON

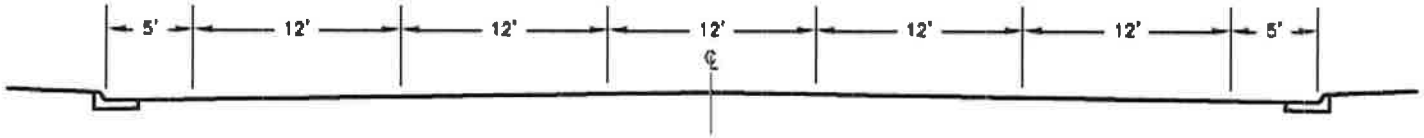


LANE OPTION 1

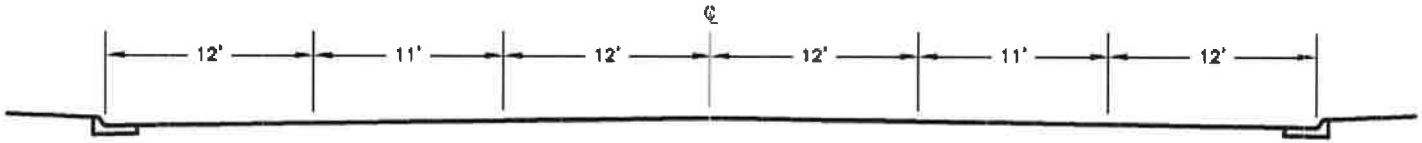


LANE OPTION 2

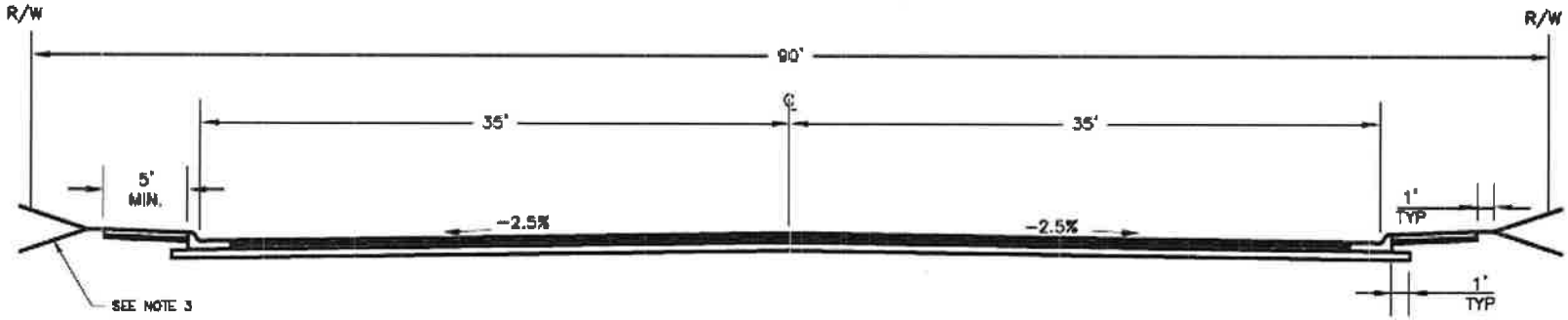


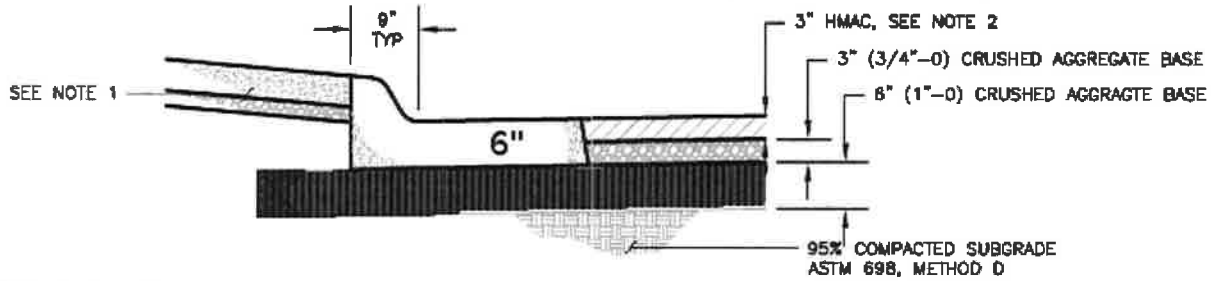


PAVEMENT SECTION

GENERAL NOTES:

1. STANDARD SIDEWALKS SHALL HAVE A NORMAL CONCRETE THICKNESS OF 4" ON 2" OF (3/4"-0) CRUSHED AGGREGATE BASE.

2. HOT MIX ASPHALT CONCRETE PAVEMENT SHALL BE CONSTRUCTED IN TWO EQUAL 1 1/2" LIFTS.

3. SLOPES SHALL NOT EXCEED 3:1 UNLESS APPROVED BY THE CITY.

APPROVED:

CITY ENGINEER

DATE:

STANDARD PLAN

ST03

# MINOR ARTERIAL CROSS SECTION

CITY OF HERMISTON

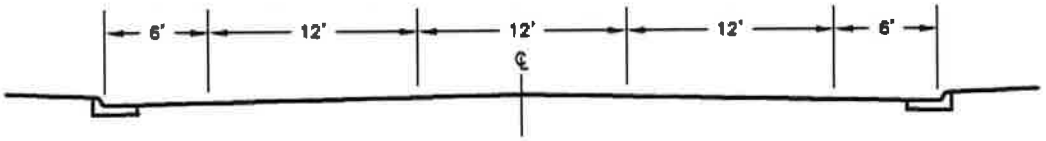


LANE OPTION 1

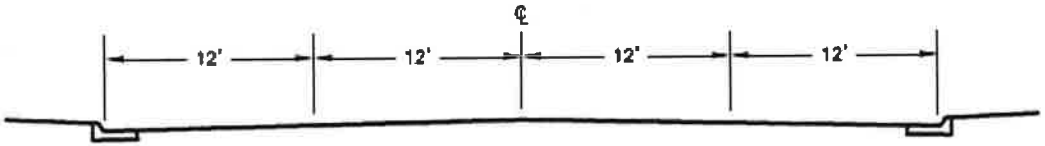


LANE OPTION 2

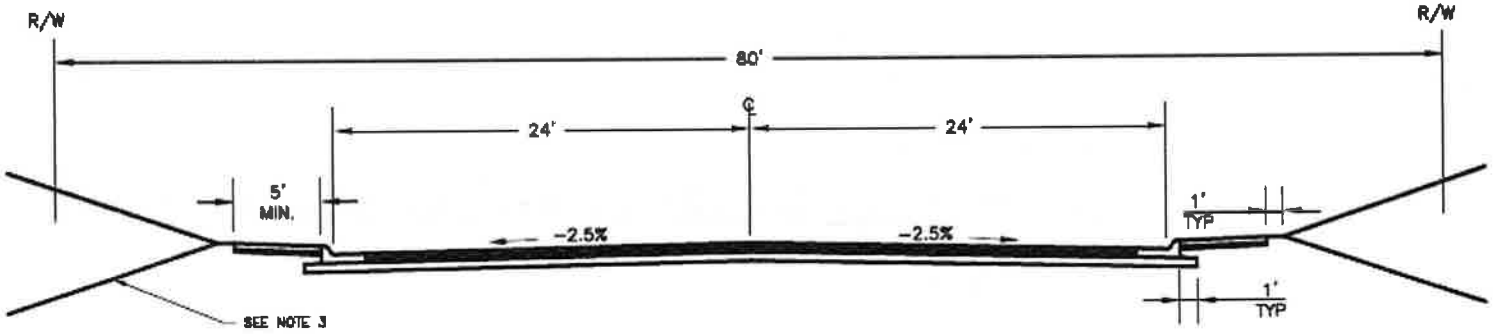


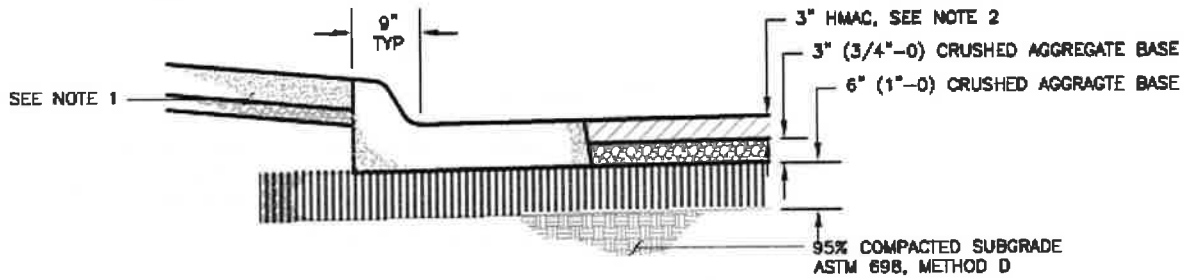


PAVEMENT SECTION

GENERAL NOTES:

1. STANDARD SIDEWALKS SHALL HAVE A NORMAL CONCRETE THICKNESS OF 4" ON 2" OF (3/4"-0) CRUSHED AGGREGATE BASE.

2. HOT MIX ASPHALT CONCRETE PAVEMENT SHALL BE CONSTRUCTED IN TWO EQUAL 1 1/2" LIFTS.

3. SLOPE SHALL NOT EXCEED 3:1 UNLESS APPROVED BY THE CITY

APPROVED:

CITY ENGINEER

DATE:

STANDARD PLAN

ST04

# COLLECTOR CROSS SECTION

CITY OF HERMISTON

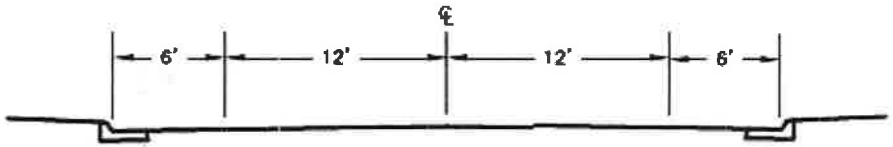


LANE OPTION 1

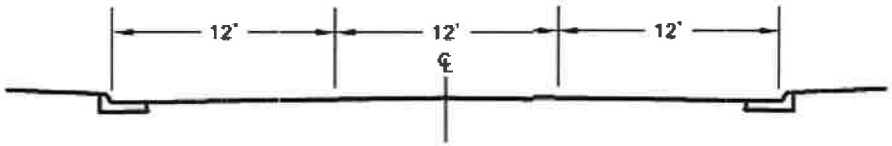


LANE OPTION 2

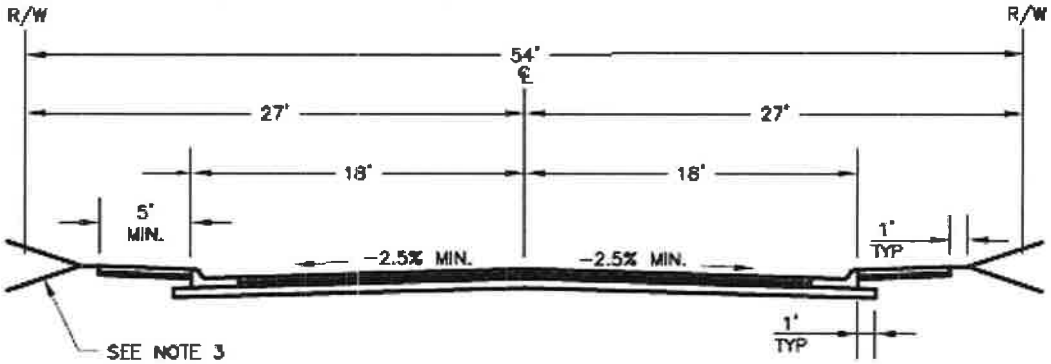


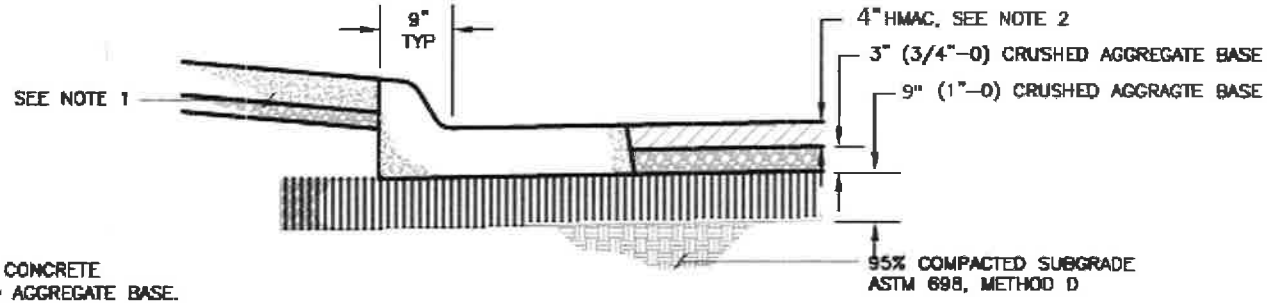


PAVEMENT SECTION

GENERAL NOTES:

1. STANDARD SIDEWALKS SHALL HAVE A NORMAL CONCRETE THICKNESS OF 4" ON 2" OF (3/4"-0) CRUSHED AGGREGATE BASE.
2. HOT MIX ASPHALT CONCRETE PAVEMENT SHALL BE CONSTRUCTED IN TWO EQUAL LIFTS
3. SLOPES SHALL NOT EXCEED 3:1 UNLESS APPROVED BY THE CITY.

APPROVED

CITY ENGINEER

DATE

STANDARD PLAN

ST05

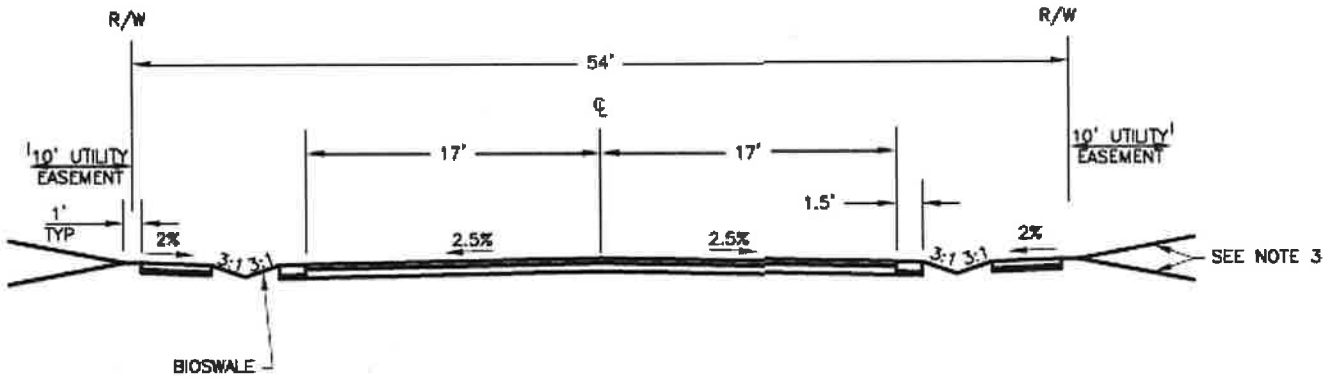


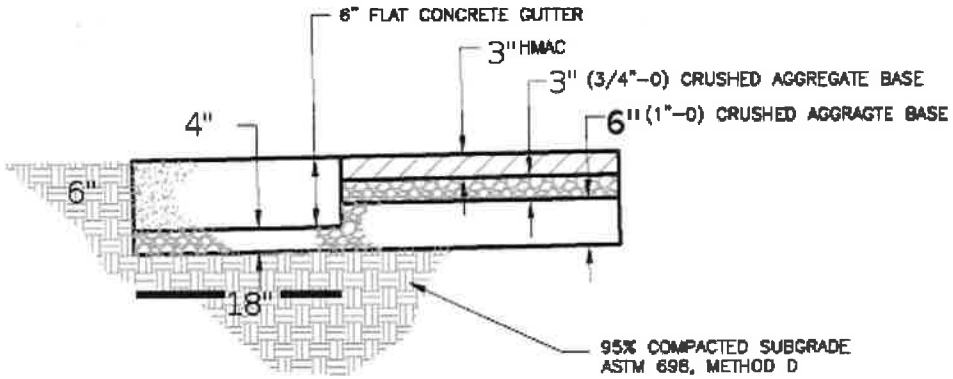


PAVEMENT SECTION

GENERAL NOTES:

1. BIO-SWALE DEPTH SHALL BE 8 INCHES. BIO-SWALES SHALL BE PLANTED WITH GRASS OR INSTALLED WITH SOD OVER A MINIMUM 6" DEPTH OF TOP SOIL.

2. STANDARD SIDEWALKS SHALL HAVE A NORMAL CGC THICKNESS OF 4" ON 2" OF 3/4" CRUSHED AGGREGATE.

3. SLOPES SHALL NOT EXCEED 3:1 UNLESS APPROVED BY THE CITY.

# LOCAL CROSS SECTION

CITY OF HERMISTON

APPROVED:

CITY ENGINEER

DATE:

STANDARD PLAN

ST09

# RURAL ROAD CROSS SECTION

CITY OF HERMISTON

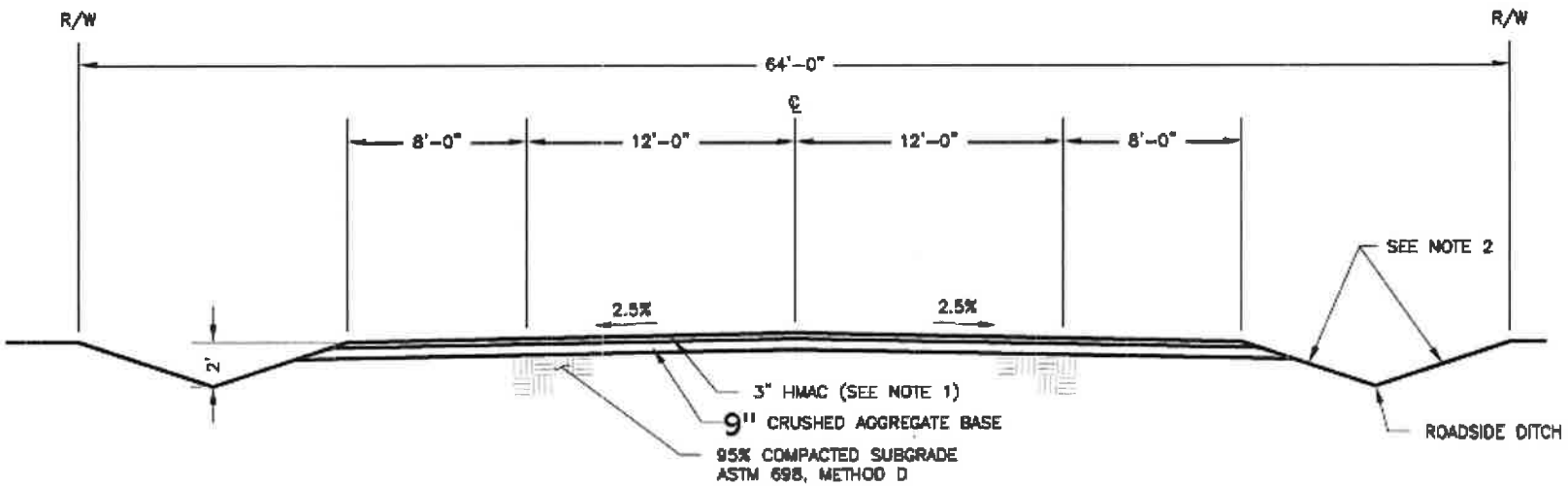


NOTES:

1. HMAC SHALL BE PLACED AND COMPACTED IN 2 EQUAL 1 1/2" LIFTS.

2. SLOPES SHALL NOT EXCEED 3:1 UNLESS APPROVED BY THE CITY.

APPROVED

CITY ENGINEER

DATE

STANDARD PLAN

ST07

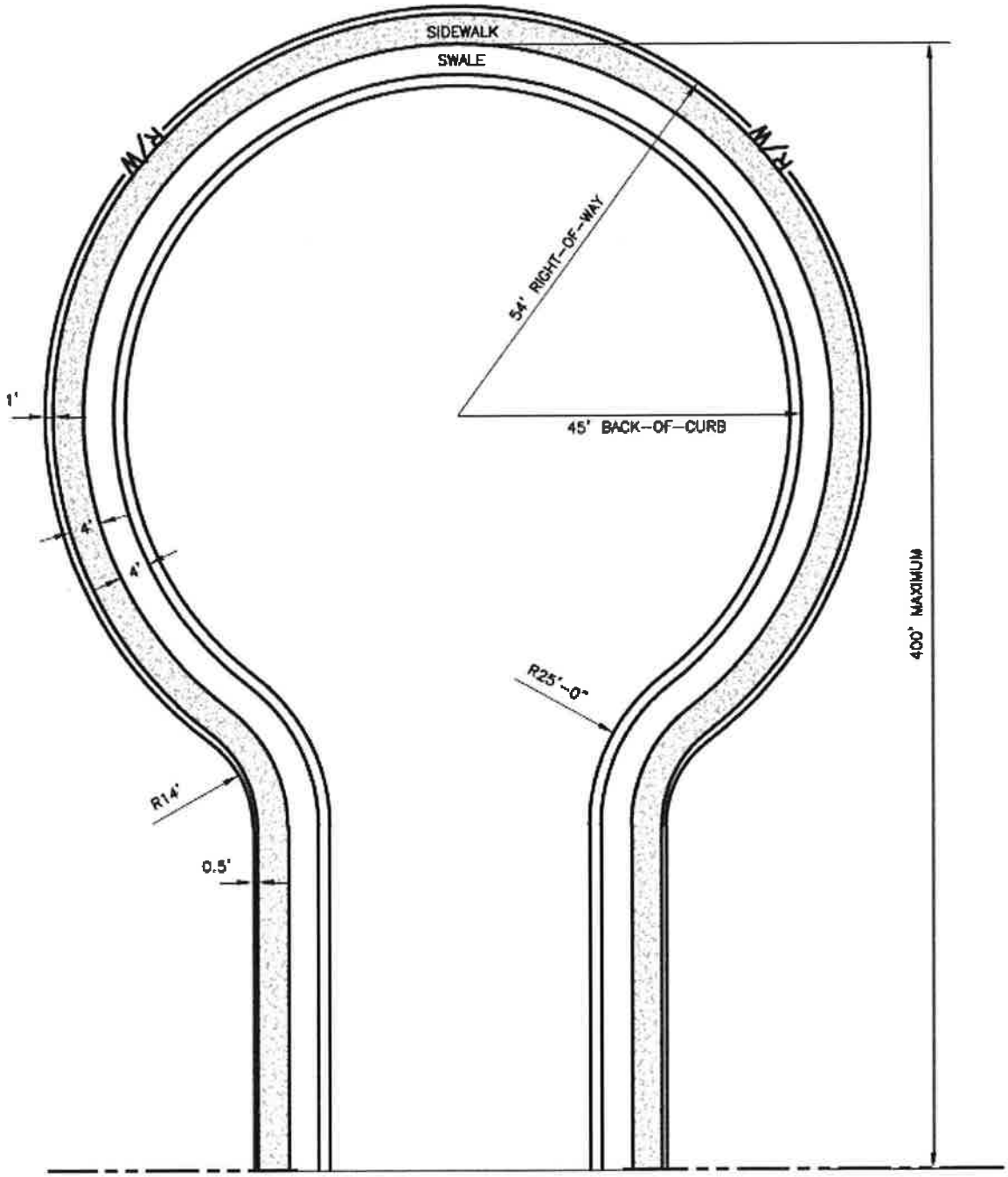


# STANDARD CUL-DE-SAC BULB

CITY OF HERMISTON

STANDARD PLAN

ST08

APPROVED: _____

CITY ENGINEER

DATE:

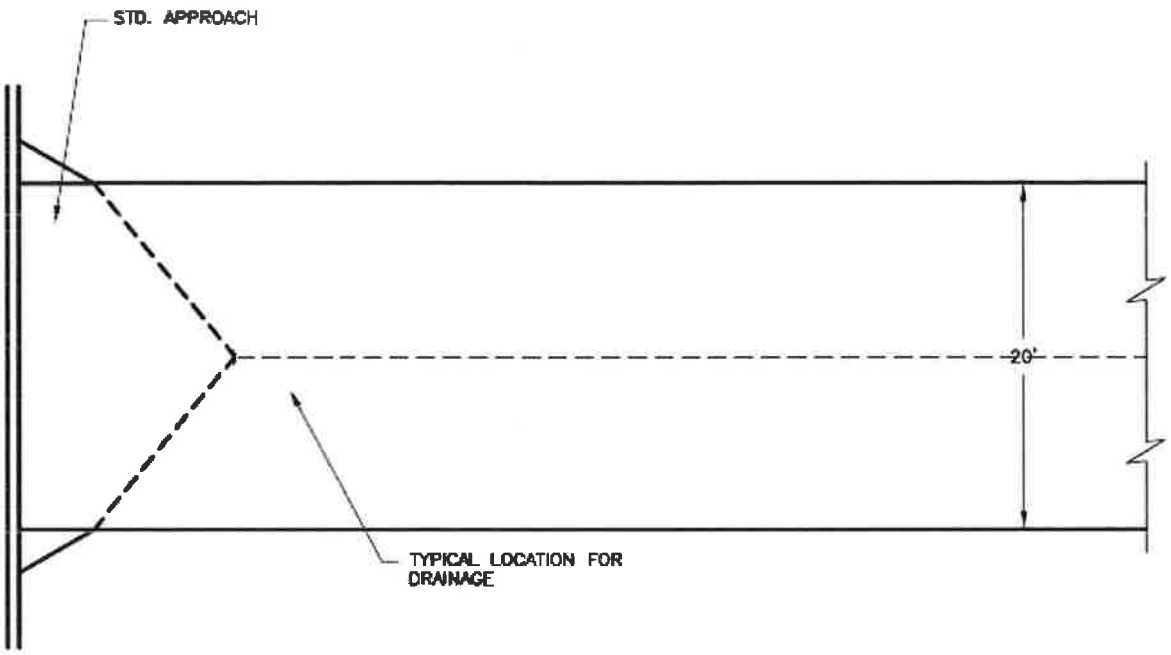


PLAN

SECTION

NOTES:

1. THE DEPTH (D) AND THE % SLOPE OF THE CRUSHED AGGREGATE BASE SHALL BE AS SHOWN ON THE PLANS.

# ALLEY

CITY OF HERMISTON

STANDARD PLAN

ST09

APPROVED: _____

CITY ENGINEER DATE:

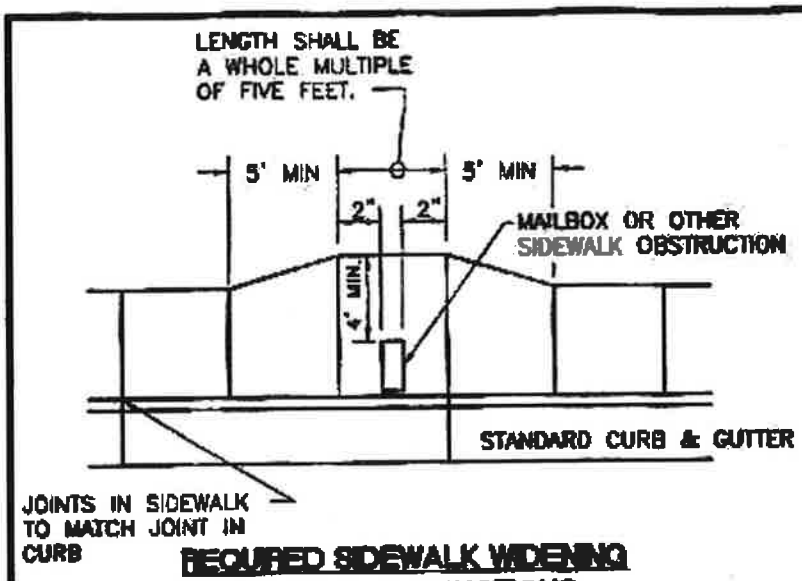


**REQUIRED SIDEWALK WIDENING AROUND OBSTRUCTIONS**

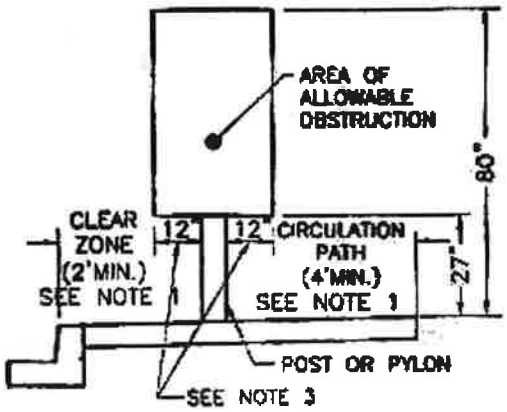


**POST MOUNTED OBSTRUCTION WITHIN SIDEWALK**

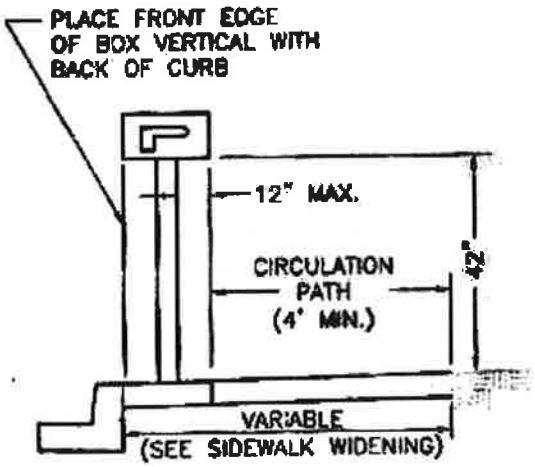


**TYPICAL MAILBOX INSTALLATION**

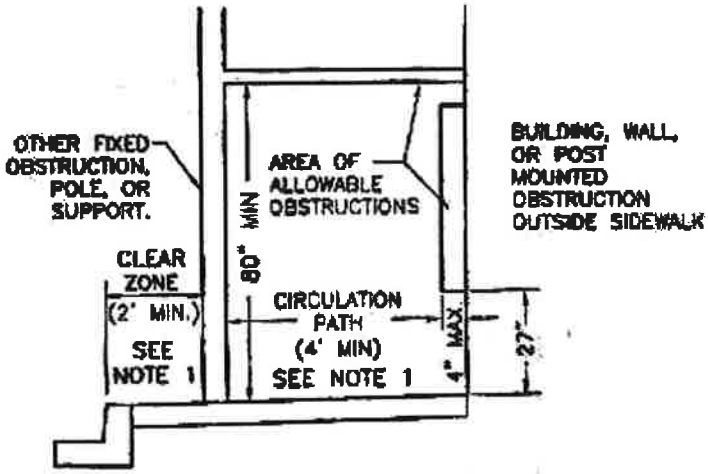


**PROTRUDING OBJECTS AND OTHER OBSTRUCTIONS**

## NOTES:

1. CLEAR ZONE AND THE CIRCULATION PATH MAY BE COMBINED PROVIDING A 5 FOOT MINIMUM SIDEWALK WIDTH IS MAINTAINED.

2. DEFLECT SIDEWALK AROUND AREA OF OBSTRUCTION WHEN OVERHANGS EXCEED ALLOWABLE LIMITS.

3. WHEN OBSTRUCTIONS ARE LOCATED WITHIN THE SIDEWALK AREA THE DIMENSION APPLIES IN ALL DIRECTIONS.

4. INSTALL FULL DEPTH EXPANSION JOINT AROUND ALL OBSTRUCTIONS PENETRATING SIDEWALK SURFACE.

5. ON CUL-DE-SACS, PLACE FRONT EDGE OF MAILBOX 6 INCHES BEHIND BACK OF CURB.

6. EXCEPTIONS TO THE REQUIREMENTS IN THIS DRAWING MUST BE APPROVED BY THE ENGINEER AND MUST COMPLY WITH 'AMERICANS WITH DISABILITY ACT.'

| CITY OF HERMISTON | |
|---|---|
| SIDEWALK DETAILS: OBSTRUCTIONS AND PROTRUDING OBJECTS | STANDARD PLAN ST10 |
| APPROVED: CITY ENGINEER DATE: | |

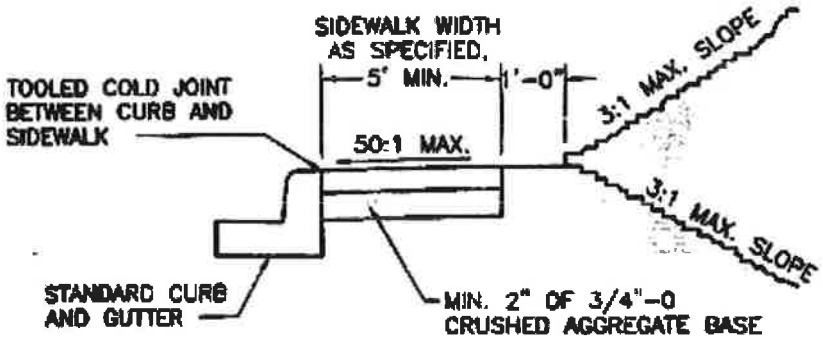


**TYPICAL CURB TYPE CROSS SECTION**

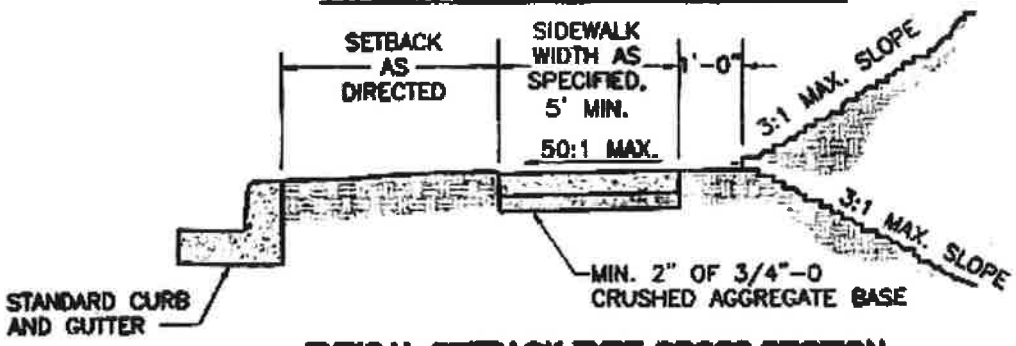


**TYPICAL SETBACK TYPE CROSS SECTION**

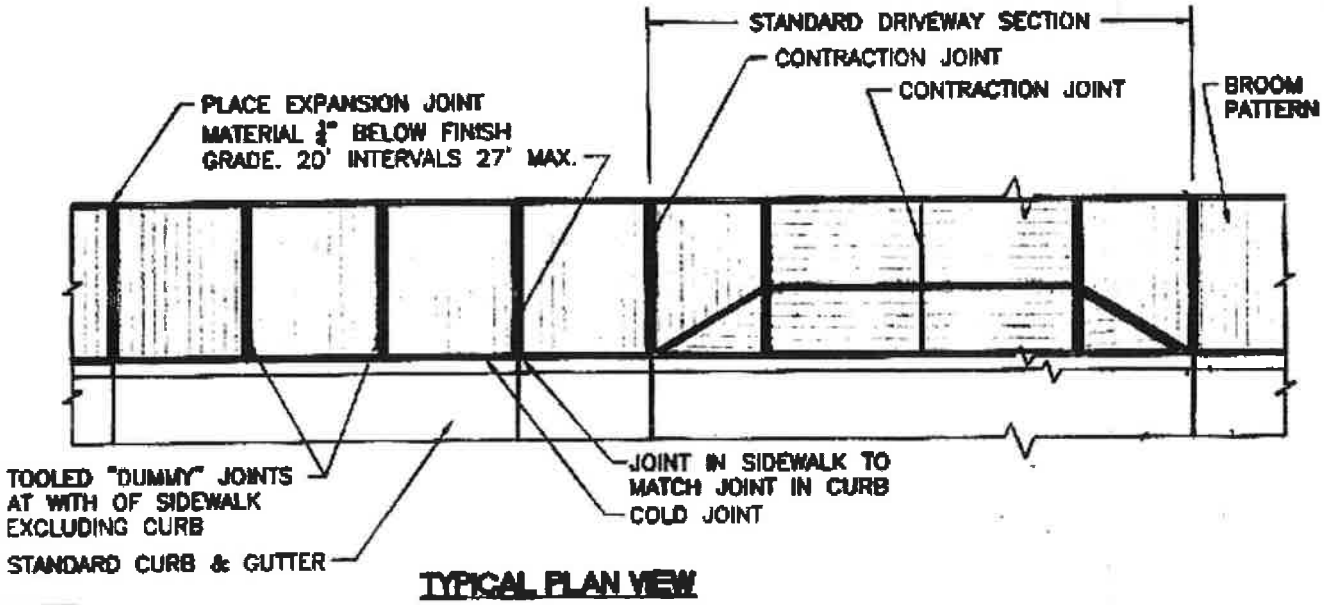


**TYPICAL PLAN VIEW**

**NOTE:**

1. SIDEWALKS 8 FEET AND WIDER SHALL HAVE A LONGITUDINAL CONTRACTION JOINT AT THE MIDPOINT.

2. CONCRETE DEPTH FOR STANDARD SIDEWALKS SHALL BE NOMINAL 4" MIN.; THICKNESS IN DRIVEWAY SHALL MATCH EXISTING DRIVEWAY.

| CITY OF HERMISTON | |
|---|---|
| SIDEWALK DETAILS | STANDARD PLAN<br>ST11 |
| APPROVED: _____ CITY ENGINEER DATE: | |

SEE CONSTRUCTION PLANS FOR LENGTH OF RADIUS OR AS APPROVED BY THE CITY ENGINEER.

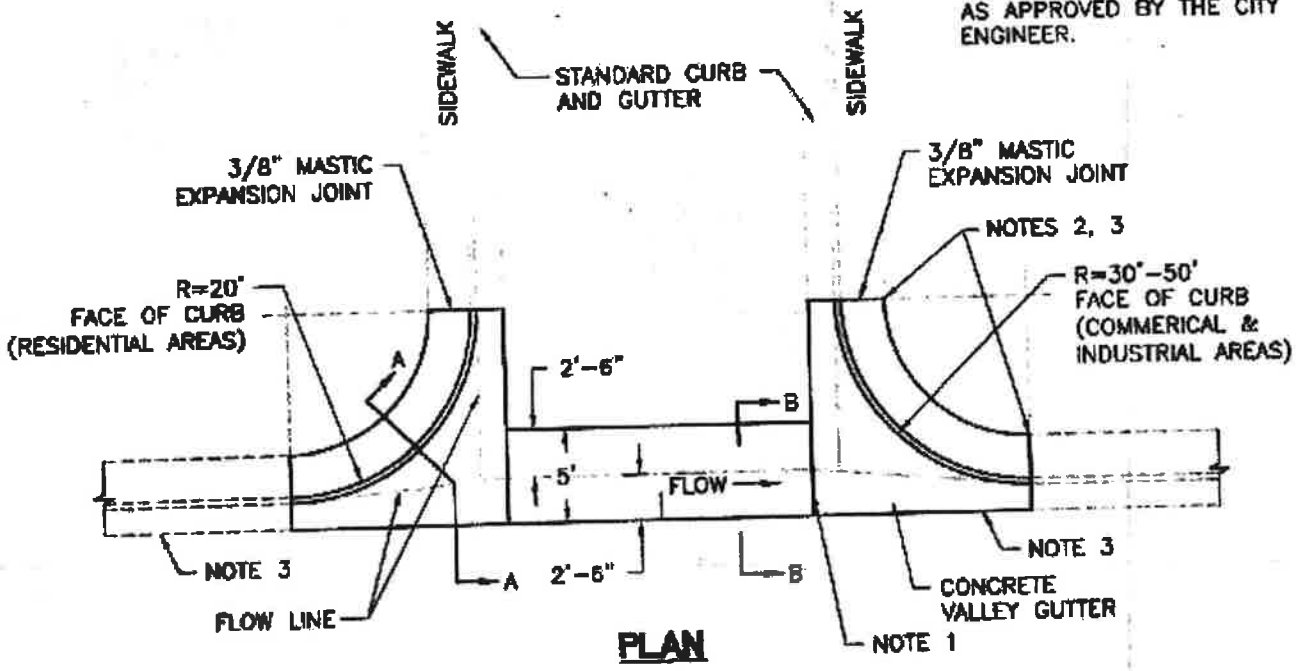


**PLAN**

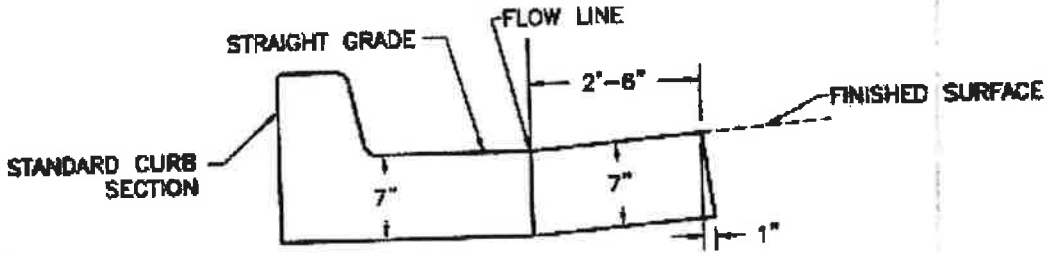


**SECTION A-A**

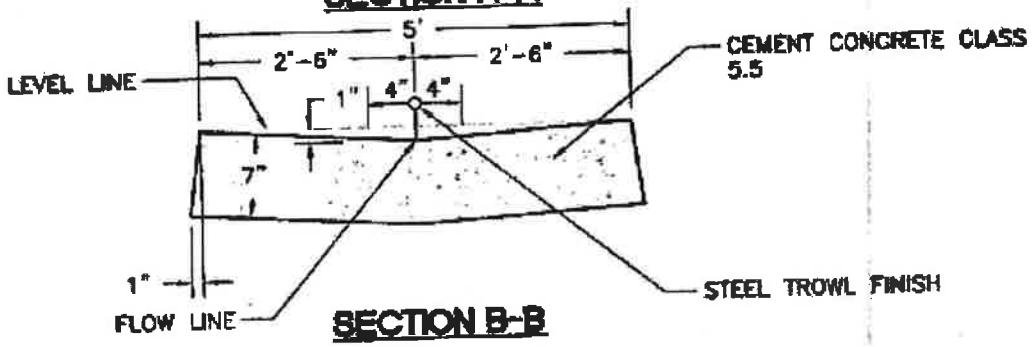


**SECTION B-B**

NOTES:

1. SEE CITY OF HERMISTAN STD. DWG. No. ST05 AND ST06 FOR WHEELCHAIR RAMP DETAILS AND LOCATIONS.
2. SEE PLAN AND PROFILE FOR ELEV.
3. STANDARD CURB AND GUTTER SECTION.
4. TRANSITION EDGE OF GUTTER.

| CITY OF HERMISTON | STANDARD PLAN |
|---|---|
| CROSS GUTTER TYPE – I | ST17 |
| APPROVED: CITY ENGINEER | DATE: |

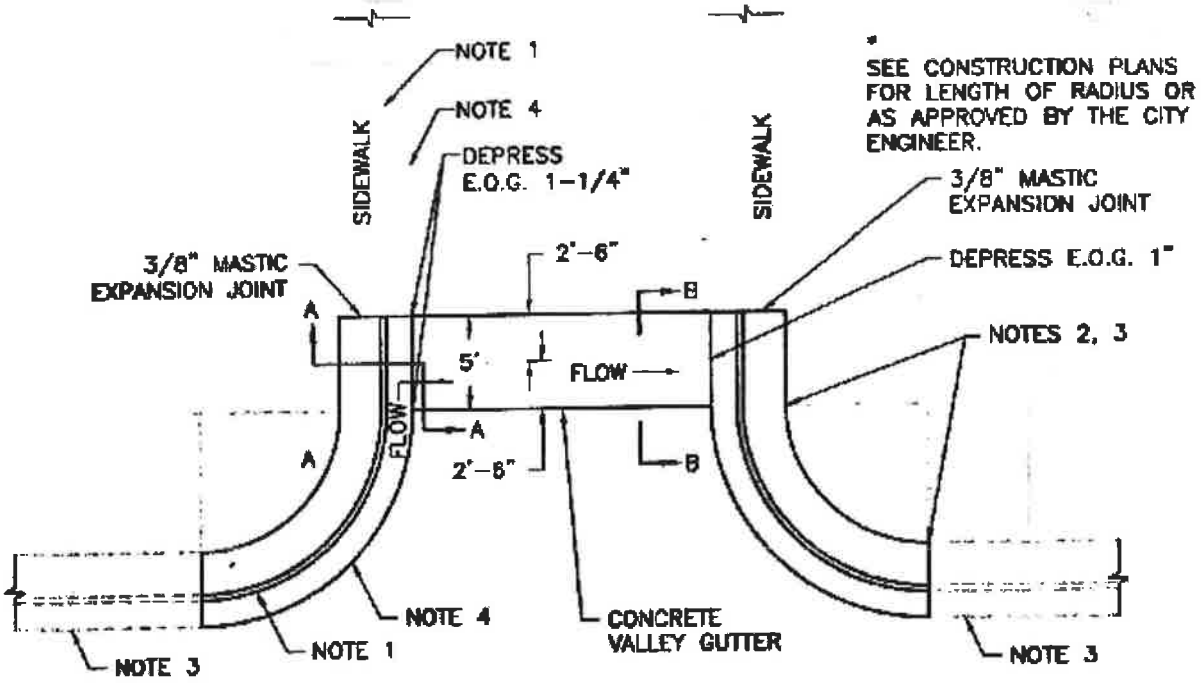


## PLAN

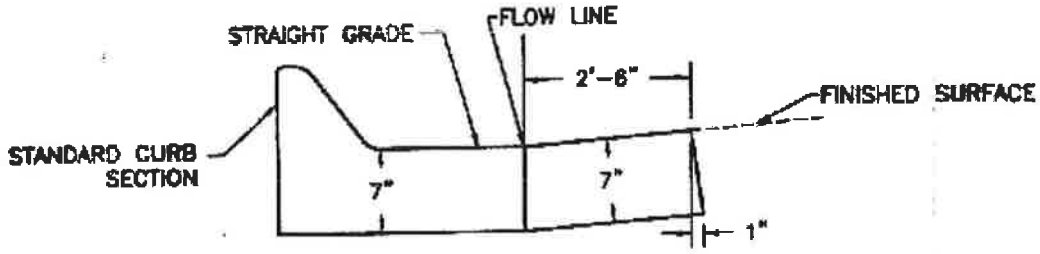


## SECTION A-A

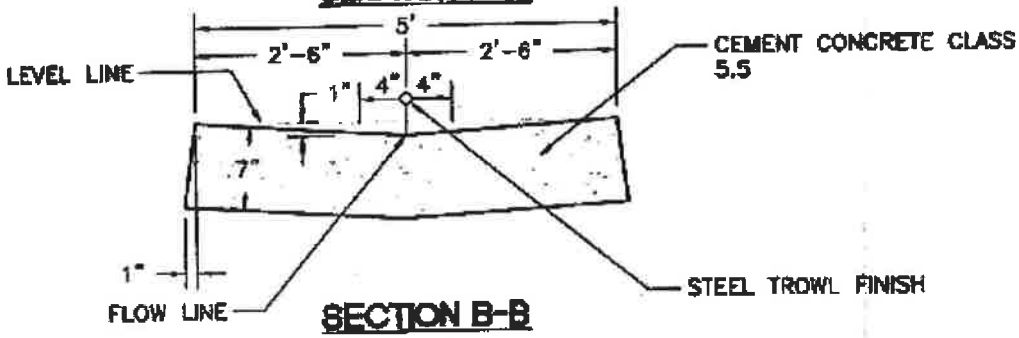


## SECTION B-B

**NOTES:**

1. SEE CITY OF HERMISTAN STD. DWG. No. ST05 AND ST06 FOR WHEELCHAIR RAMP DETAILS AND LOCATIONS.
2. SEE PLAN AND PROFILE FOR ELEV.
3. STANDARD CURB AND GUTTER SECTION.
4. TRANSITION EDGE OF GUTTER.

| CITY OF HERMISTON | |
|---|---|
| CROSS GUTTER TYPE – II | STANDARD PLAN ST18 |
| APPROVED: _____ CITY ENGINEER DATE: | |

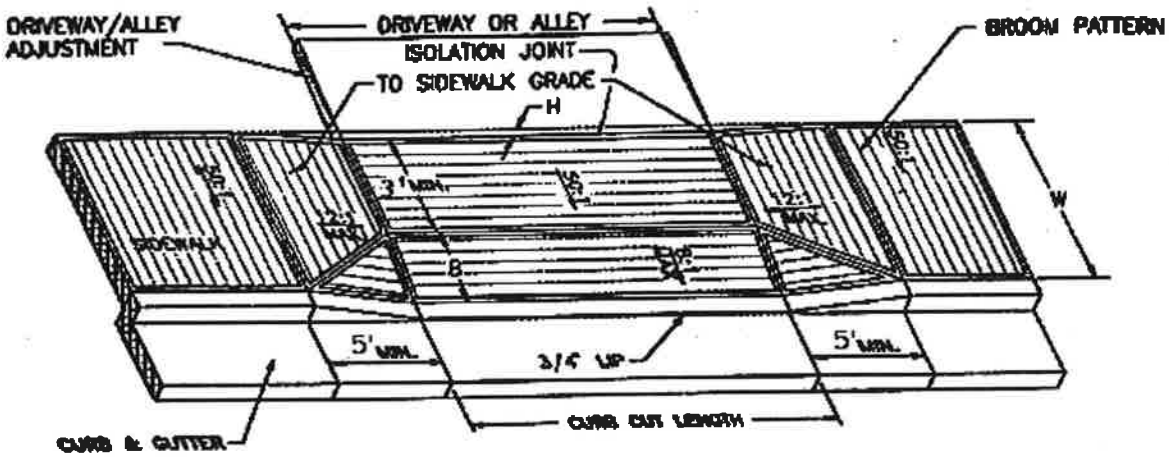


| W | B | H | |
|---|---|---|---|
| 5' | 2' | 0.27' | (3-1/4") |
| 6' | 2' | 0.29' | (3-1/2") |
| 7' | 3' | 0.19' | (2-1/4") |
| 8' | 4' | 0.08' | (1") |

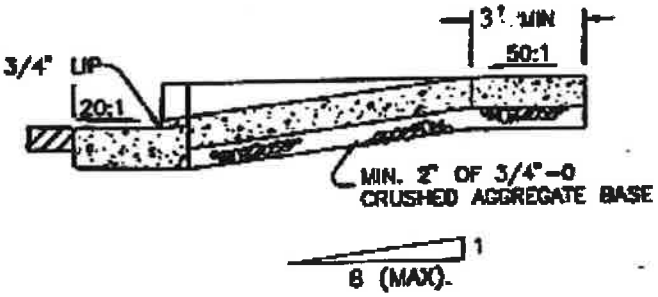


**TYPICAL SECTION THROUGH DRIVEWAY/ALLEY RAMP**

**NOTES:**

1. RESIDENTIAL DRIVEWAYS AND SIDEWALK SECTIONS THROUGH DRIVEWAYS SHALL HAVE A MINIMUM NOMINAL THICKNESS OF 6". CONCRETE STRENGTH SHALL BE 3300 PSI.
2. CONCRETE FOR COMMERCIAL USE AND ALLEY APPROACHES SHALL HAVE A MINIMUM NOMINAL THICKNESS OF 8". CONCRETE STRENGTH SHALL BE 3300 PSI.
3. CURB TRANSITIONS FOR COMMERCIAL USE AND ALLEY APPROACHES SHALL BE 5 FEET.
4. CONSTRUCT CONTRACTION JOINT IN CENTER OF DRIVEWAY WHEN DRIVEWAY WIDTH EXCEEDS 15'.
5. NO LIP AT GUTTER IF USED AS SIDEWALK ACCESS RAMP.
6. SEE SIDEWALK DETAILS FOR RESTRICTIONS AND SPECIFICATIONS NOT SHOWN.
7. THE 50:1 CROSS-SLOPE OF SIDEWALK IS MEASURED FROM HORIZONTAL. THE 12:1 SLOPE OF SIDEWALK TRANSITION TO DRIVEWAY/ALLEY IS RELATIVE TO THE RUNNING SLOPE OF THE SIDEWALK. THE SLOPE OF THE APRON IS MEASURED RELATIVE TO HORIZONTAL.

APWA OREGON CHAPTER

DRIVEWAY AND ALLEY APPROACHES WITH DEPRESSED CURBLINE SIDEWALK

| DATE: | DRAWING NO. |
|---|---|
| AUG 1996 | 208 |

FILENAME: APWA0056.DWG

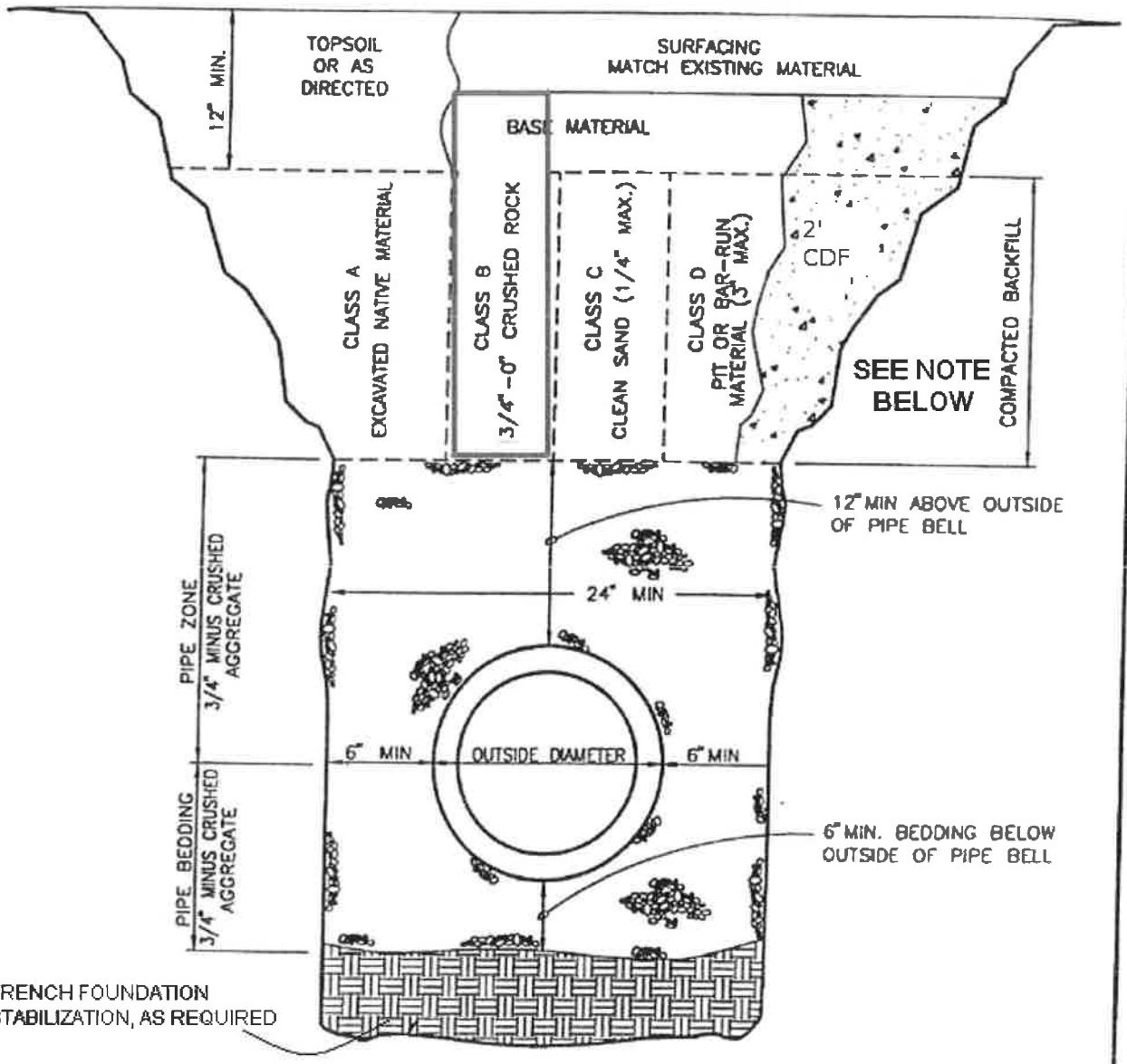


NOTES; Per. City of Hermiston Street Department

1) Surfacing of paved areas shall comply with standard street drawings.

2) Acceptable Trench Back Fill Shall Be;

- ** Oregon State Spec HWY Rock 3/4" - 0" or 1 1/2" - 0"
- ** Placed and compacted in 6" lifts
  - Trench depth of less than 1ft. Visual inspection by City
  - Trench depth 1ft. to 4 ft. -- Compaction tests at finish rock grade every 10 ft. of length.
  - Trench depth over 4 ft. Contact Street Superintendent

| APWA OREGON CHAPTER | |
|---|---|
| TRENCH BACKFILL, BEDDING, AND PIPE ZONE | |
| DATE: AUG 1996 | DRAWING NO. 301 |

FILENAME: APWA0015.DWG

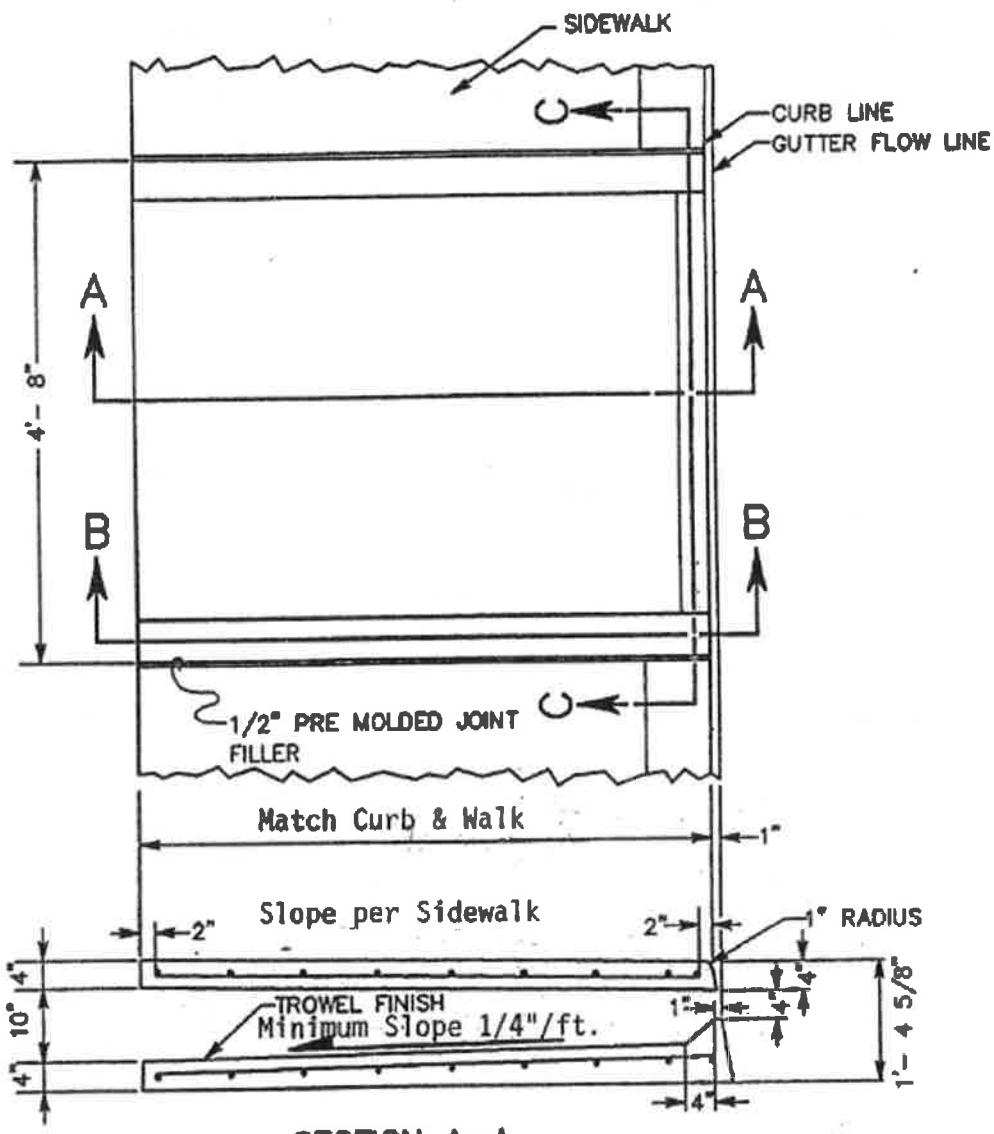


SECTION A–A

SECTION B–B
REBAR PLACEMENT

# SPECIAL CURB INLET

| CITY OF HERMISTON | |
|---|---|
| SWALE INLET | STANDARD PLAN<br>2-20-8<br>Sheet 1 of 2 |
| APPROVED P. D. Nystrom, P.E. CITY ENGINEER — 5/03 DATE | |

## GENERAL NOTES

1. CURB INLET SHALL BE CONSTRUCTED IN ACCORDANCE WITH ASTM C 478 (AASHTO M 199) & ASTM C 890 UNLESS OTHERWISE SHOWN ON PLANS OR NOTED IN THE PROJECT SPECIAL PROVISIONS.
2. TOP SURFACE TO BE BROOM FINISHED.
3. ALL EXTERNAL EDGES NOT LABELED SHALL BE TROWELLED WITH 1/4" RADIUS EDGER.

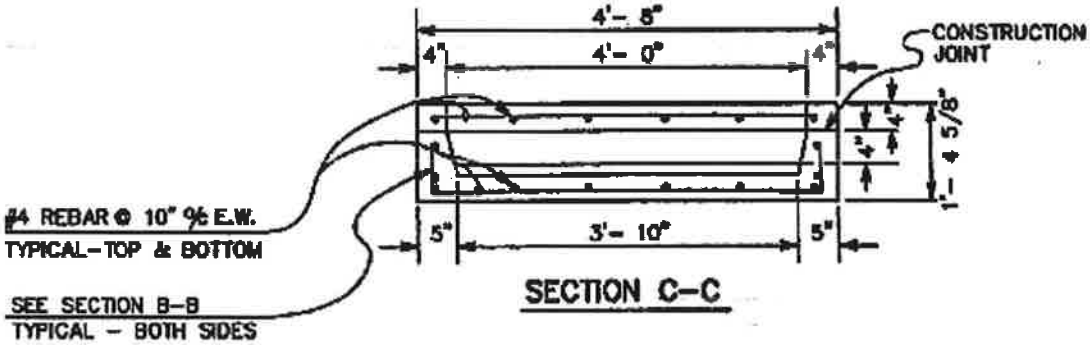


SECTION C-C

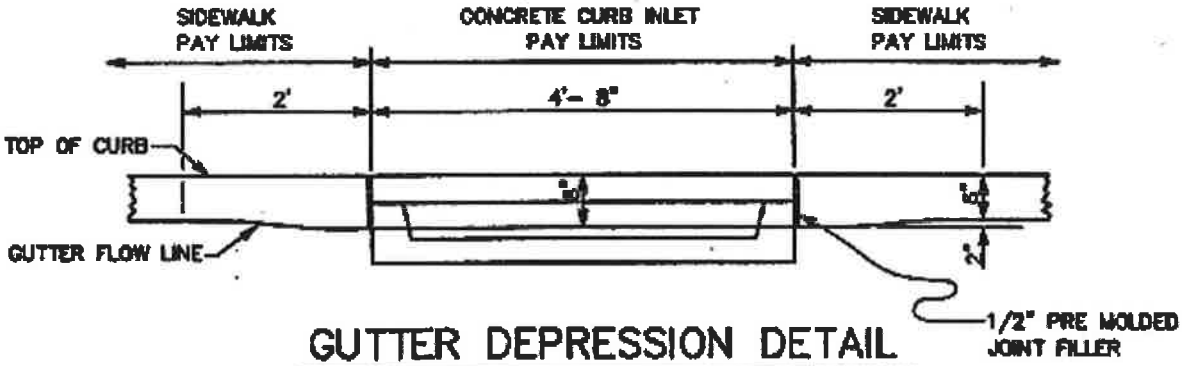


## GUTTER DEPRESSION DETAIL

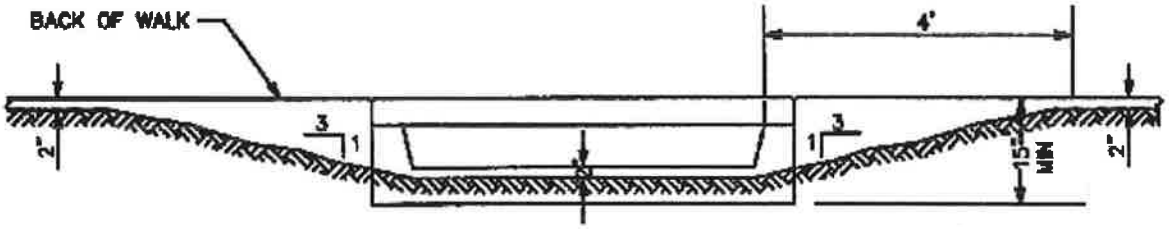


## OUTLET SWALE GRADING DETAIL

| CITY OF HERMISTON | |
|---|---|
| SWALE INLET | STANDARD PLAN 2-20-8 Sheet 2 of 2 |
| APPROVED P.D. Nystrom, P.E. CITY ENGINEER 5/03 DATE | |

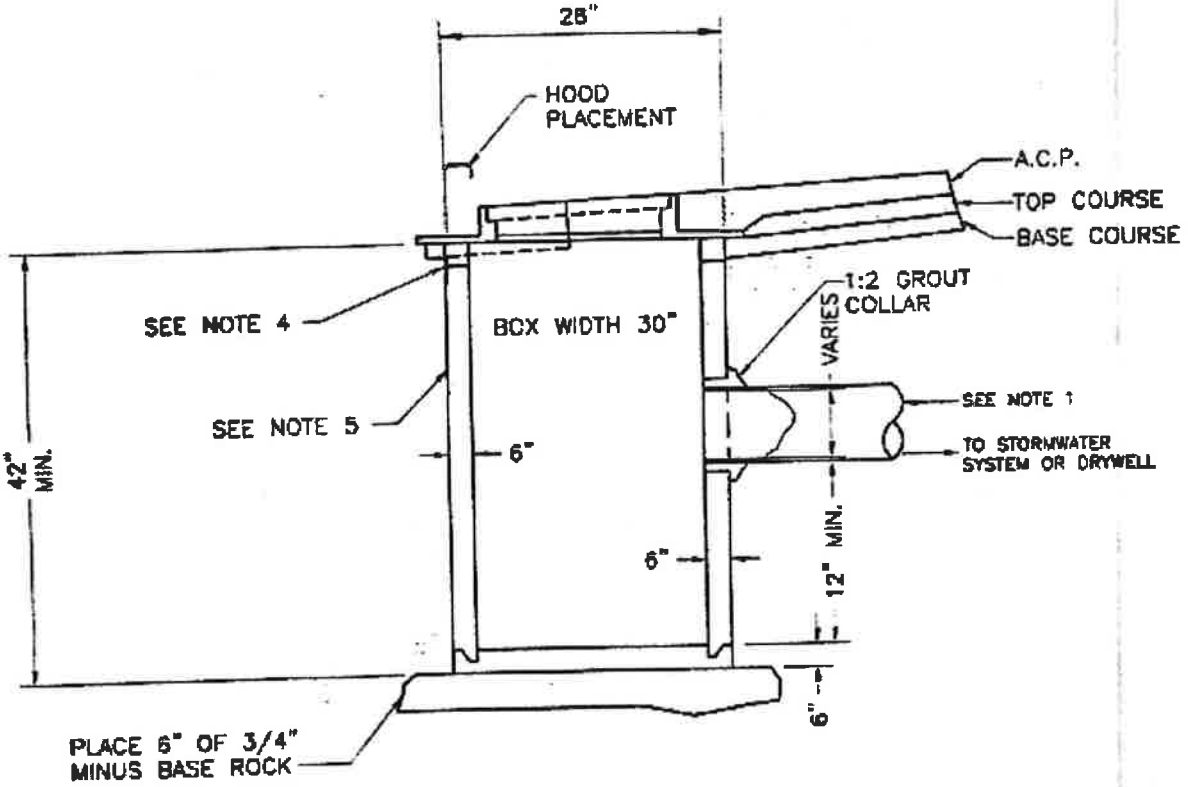


NOTES:

1. MINIMUM PIPE BURY TO BE 18", SEE PIPE SPECIFICATIONS FOR ADDED REQUIREMENTS. MAXIMUM NUMBER AND SIZE OF PIPE CONNECTING INTO CATCH BASIN SHALL NOT EXCEED 3–12" PIPES.

2. FILTER FABRIC TO BE INSTALLED UNDER GRATE PER SECTION 2–28 OF THESE SPECIFICATIONS. REMOVE ONLY WHEN DIRECTED BY ENGINEER.

3. PRECAST BASE AND WALLS MAY BE A MINIMUM OF 4" THICK AND SHALL BE WIRE REINFORCED.

4. 1:2 GROUT BETWEEN CATCH BASIN RING AND CONCRETE TILE, BOTH INSIDE AND OUTSIDE. ADJUSTMENTS 2" AND GREATER TO BE MADE WITH PRECAST CONCRETE RINGS.

5. WIRE REINFORCED PRECAST CATCH BASIN SHALL BE REQUIRED WHEN 3–12" PIPES ARE TO BE CONNECTED.

6. PORTLAND CEMENT CONCRETE SHALL BE A MINIMUM OF CLASS 3300.

7. FRAME AND GRATE SHALL CONFORM TO CITY OF HERMISTON STANDARD SD07.

| CITY OF HERMISTON | STANDARD PLAN |
|---|---|
| CATCH BASIN | SD01 |

APPROVED: _____ DATE: _____
CITY ENGINEER

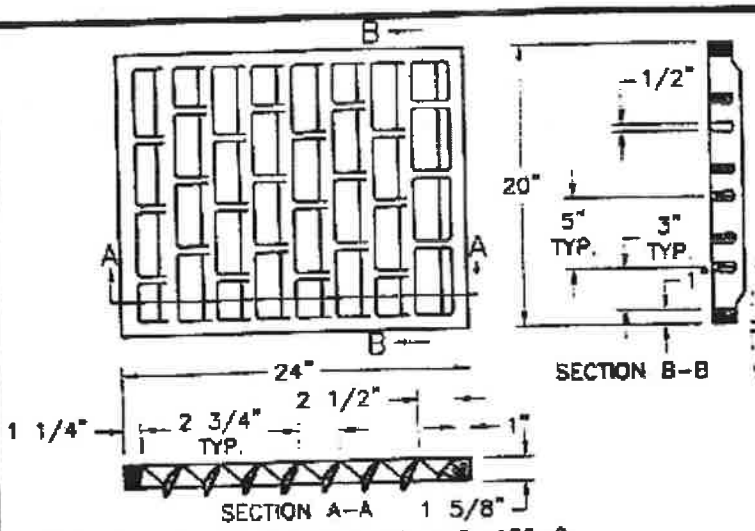


STYLE D-1 INLAND FOUNDRY CO. INC. 432-2

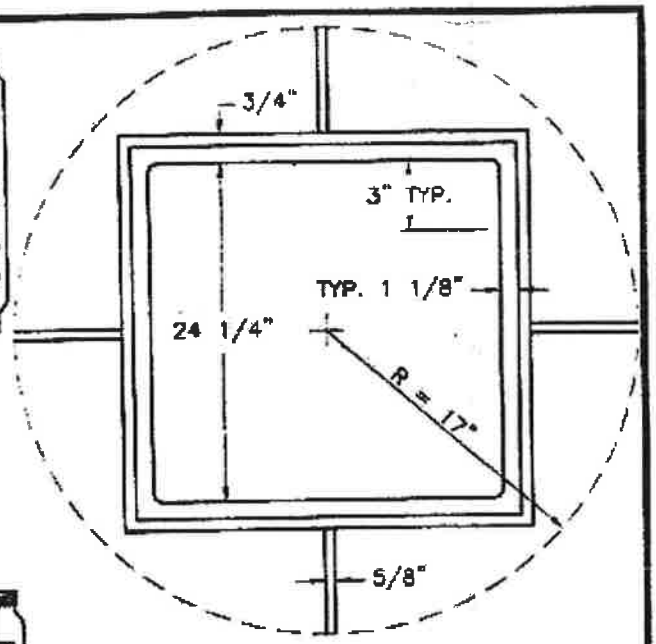


TYPE "A" FRAME

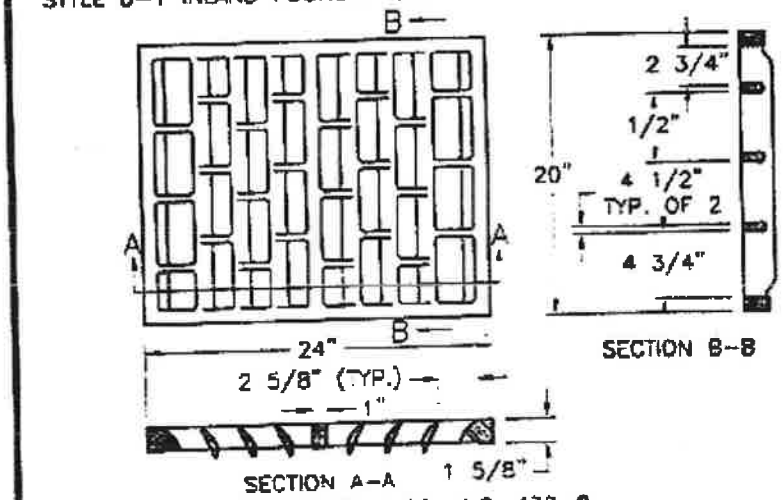


STYLE D-2 INLAND FOUNDRY CO. INC. 432-2

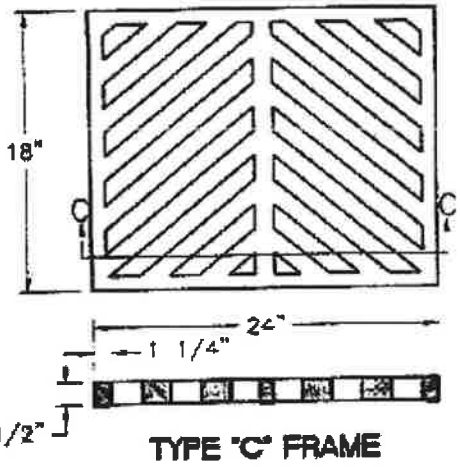


TYPE "C" FRAME

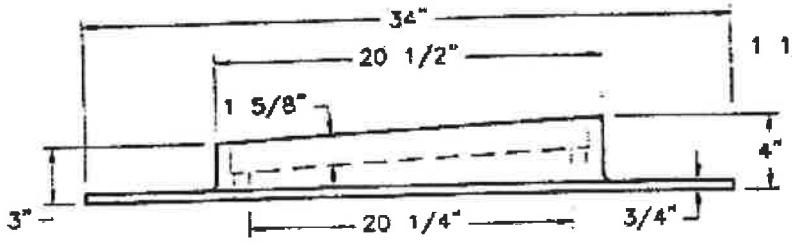


TYPE "A" FRAME

INLAND FOUNDARY CO. FRAME NO. 433 OR APPROVED EQUAL

NOTES:

- STYLE D-1 OR EQUAL USE AT CONTINUOUS GRADE LOCATIONS
- STYLE D-2 OR EQUAL USE AT CURB LOW POINTS

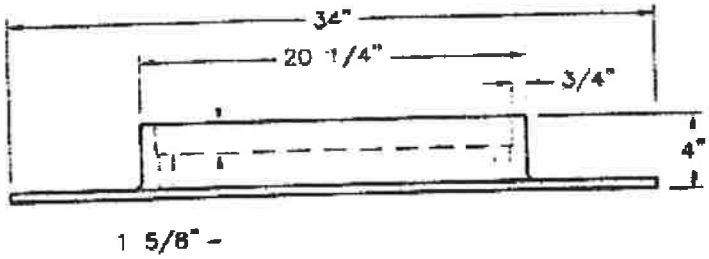


TYPE "B" FRAME
(SPECIAL USE ONLY)

INLAND FOUNDARY CO. FRAME NO. 432 OR APPROVED EQUAL

CATCH BASIN FRAME AND COVER

| CITY OF HERMISTON | |
|---|---|
| CATCH BASIN DETAILS | STANDARD PLAN SD08 |
| APPROVED: CITY ENGINEER DATE: | |

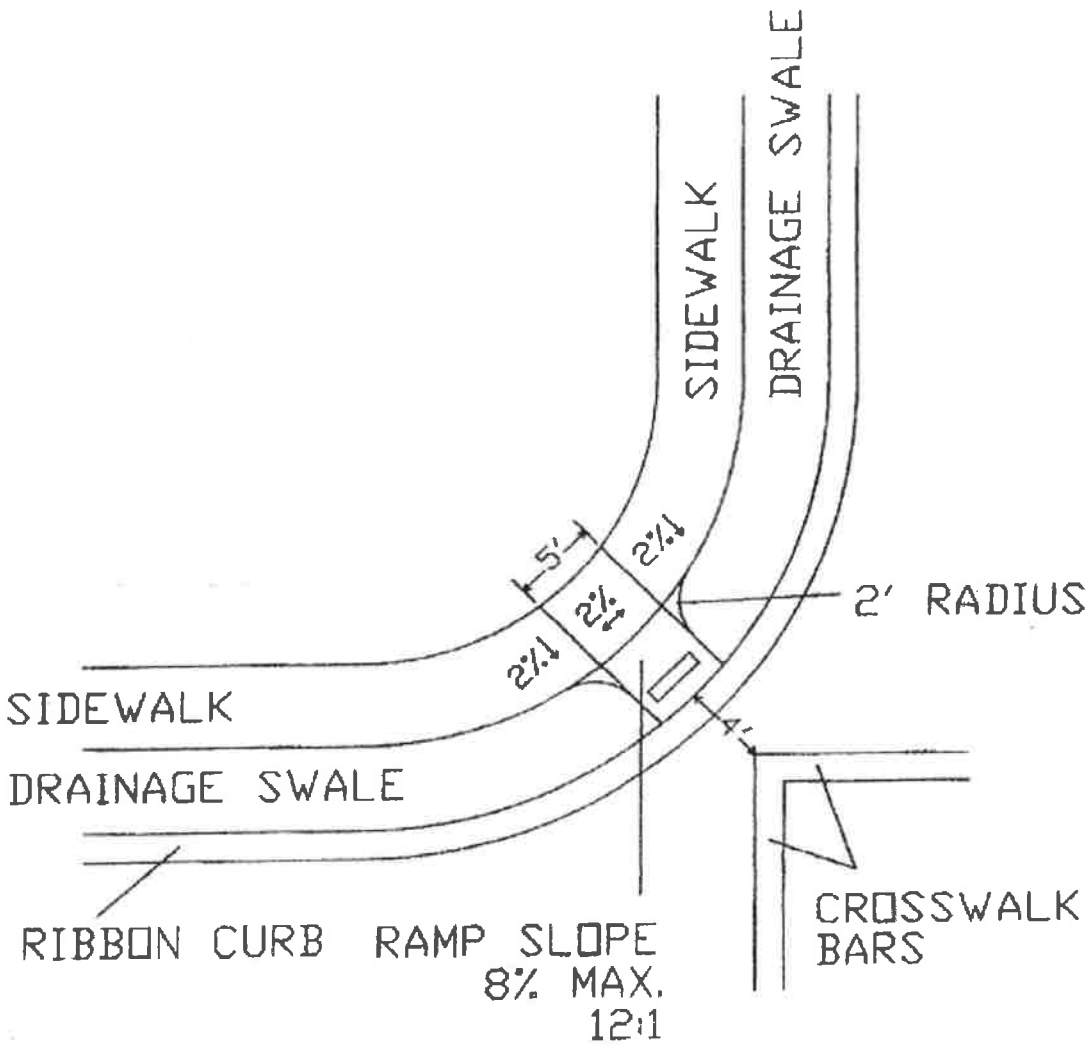


NOTE:

1) Drainage Swale minimum width shall be 4', 3 to 1 slope to center swale.
2) Sidewalk cross slope, maximum 2%.
3) Sidewalk landing area, maximum 2% any direction
4) ADA Ramp slope, maximum 8%, cross slope maximum 2%
5) Truncated Domes required, 2' by 4' minimum size
5) Crosswalk Bars, 12" (Thermoplastic)
6) Crosswalk width, minimum 8' (inside bars)

| CITY OF HERMISTON | |
|---|---|
| SIDEWALK ADA RAMP / RIBBON CURB | STANDARD PLAN |
| APPROVED; P.D. Nazarth CITY ENGINEER 11/8/06 DATE | 2 - 11 - 3 |

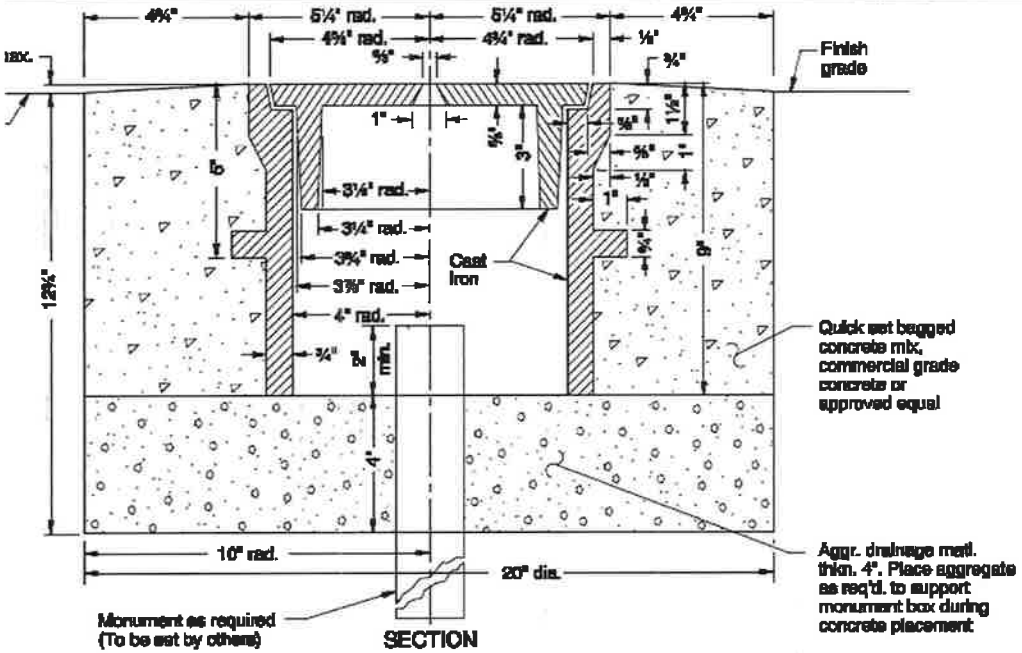


SECTION

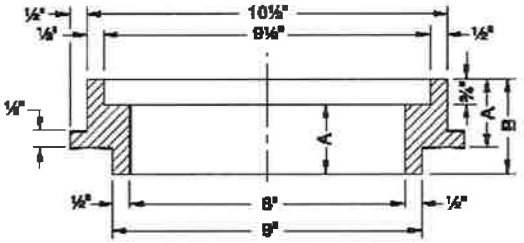


SECTION A-A

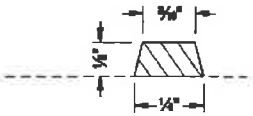


SECTION OF RAISED LE

PLAN OF COVER

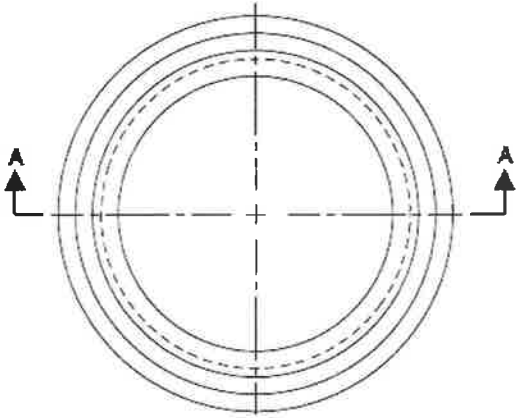


PLAN

RISER RING

RISER RING TABL

| DIM. | RISER RING ADJUSTMENT HE | | |
|---|---|---|---|
| | 1½" | 2" | 2½" |
| A | 1½" | 2" | 2½" |
| B | 2¼" | 2¾" | 3¼" |

CALC. BOOK NO. _____

BASELINE REPORT DATE _____

NOTE: All material and workmanship shall the current Oregon Standard Speci

*The selection and use of this Standard Drawing, while designed in accordance with generally accepted engineering principles and practices, is the sole responsibility of the user and should not be used without consulting a Registered Professional Engineer.*

OREGON STANDARD D

MONUMENT BI

2006

| DATE | REVISION DESCR |
|---|---|
| | |

**Effective Date: June 1, 2009 - November 30, 2009**

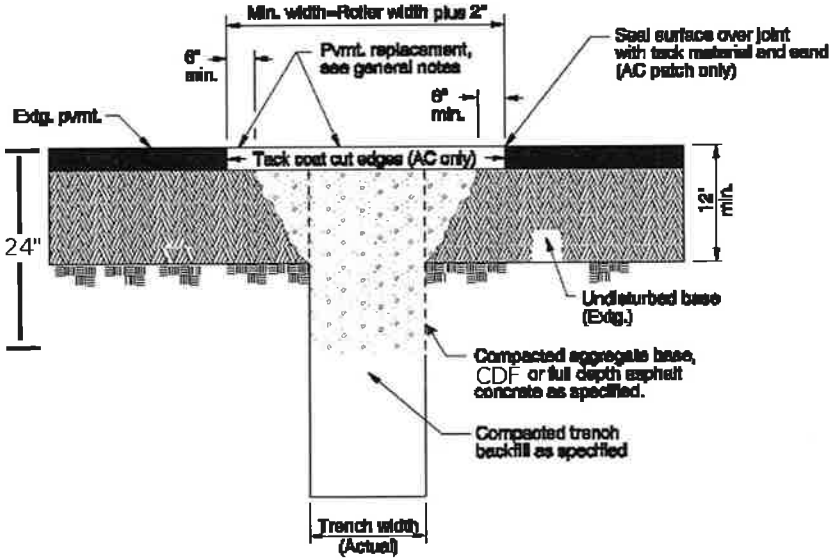


GENERAL NOTES FOR ALL DETAILS:

1. All existing AC or PCC pavement shall be sawcut prior to repaving.
2. Concrete pavement shall be replaced with concrete to a minimum th to the thickness of removed pavement, whichever is greater.
3. Place AC mix minimum thkn. of 4" or the thkn. of the removed pave is greater. Compact as specified.

CALC. BOOK NO. _____ BASELINE REPORT DATE _____

*The selection and use of this Standard Drawing, while designed in accordance with generally accepted engineering principles and practices, is the sole responsibility of the user and should not be used without consulting a Registered Professional Engineer.*

NOTE: All material and workmanship shall the current Oregon Standard Speci

OREGON STANDARD D

STREET CU

2002

| DATE | REVISION DESCR |
|---|---|
| 10-02 | REVISED NOTE |
| 01-03 | REVISED DETAIL AND NOTES |

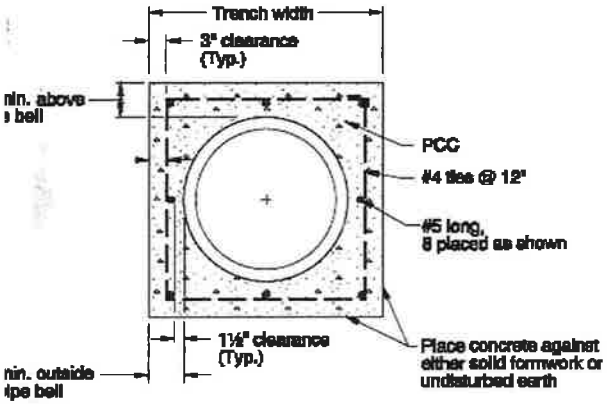


CONCRETE ENCASEMENT DETAIL

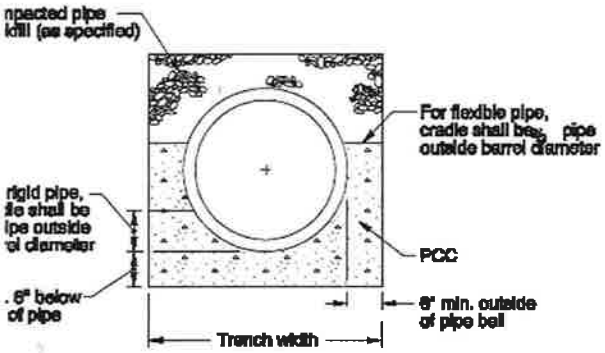


CRADLE DETAIL

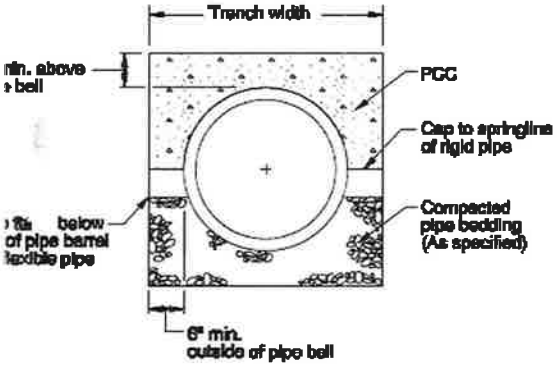


CAP DETAIL

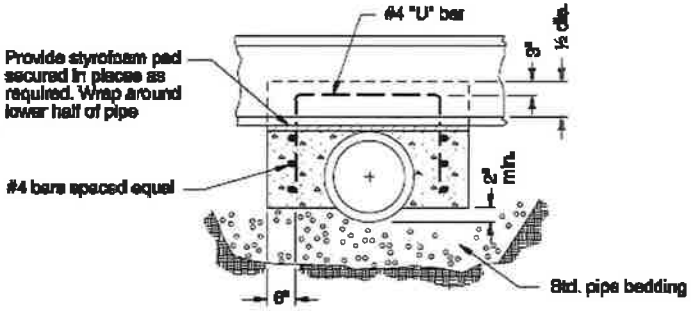


SECTION C-C

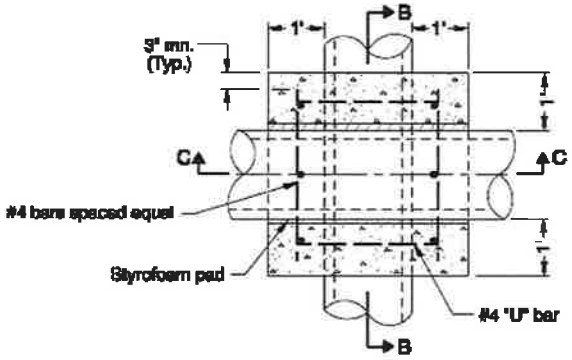


PLAN

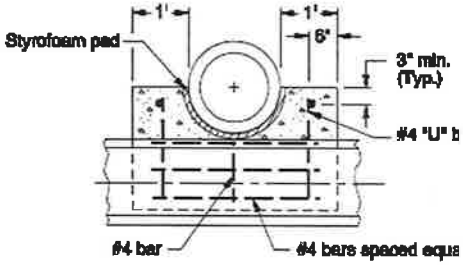


SECTION B-B

SADDLE

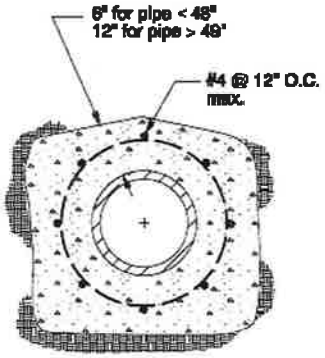


SECTION A-A

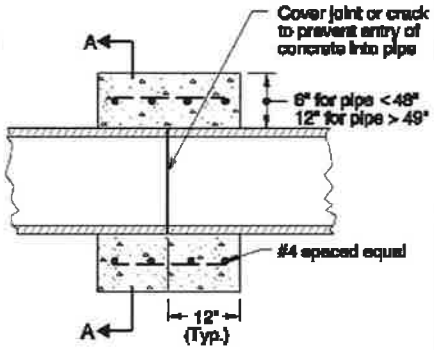


PLAN

REINFORCED CONCRETE COLLAR

GENERAL NOTES FOR ALL DETAILS:

1. All concrete shall be commercial grade concrete.
2. End all reinforcing 3" clear of ground, forms or top surface.
3. Trowel finish top surface of saddle, and cradle.
4. Reinforcement shall be # 4 vertical & horizontal bars as shown.

CALC. BOOK NO. N/A

BASELINE REPORT DATE 11-DEC-

NOTE: All material and workmanship shall the current Oregon Standard Speci

*The selection and use of this Standard Drawing, while designed in accordance with generally accepted engineering principles and practices, is the sole responsibility of the user and should not be used without consulting a Registered Professional Engineer.*

OREGON STANDARD D

CONCRETE ENCAS
CRADLE, AND CAP

2008

| DATE | REVISION DESCR |
|---|---|
| | |

**Effective Date: June 1, 2009 - November 30, 2009**

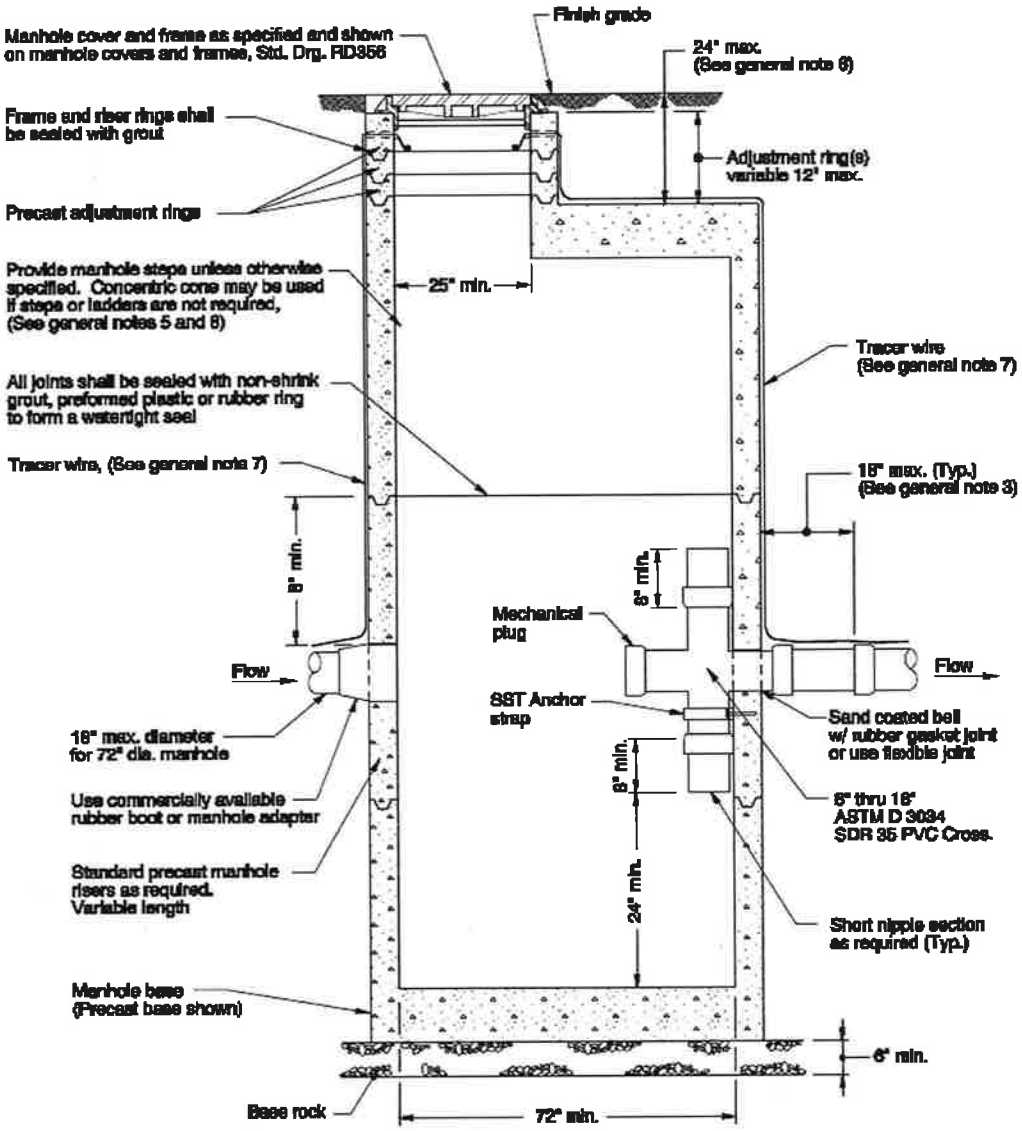


GENERAL NOTES FOR ALL DETAILS:

1. All precast sections shall conform to requirements of ASTM C478.
2. Standard precast manhole section diameter shall be 72". Maximum
3. All connecting pipes shall have a flexible, gasketted, and unrestraine of manhole wall.
4. See Std. Drg. RD344 for manhole base section.
5. See Std. Drg. RD336 for manhole steps details.
6. Adjust 24" max.
7. See Std. Drg. RD356 for tracer wire details.
8. Ladder with notched safety rail and removable extension is reqd. for depths between 24'-0" and 50'-0".

CALC. BOOK NO. _____

BASELINE REPORT DATE _____

NOTE: All material and workmanship shall the current Oregon Standard Specifi

*The selection and use of this Standard Drawing, while designed in accordance with generally accepted engineering principles and practices, is the sole responsibility of the user and should not be used without consulting a Registered Professional Engineer.*

OREGON STANDARD D

STORM SEWER POI
CONTROL MANH

2008

| DATE | REVISION DESCR |
|---|---|
| | |
| | |
| | |
| | |

**Effective Date: June 1, 2009 - November 30, 2009**

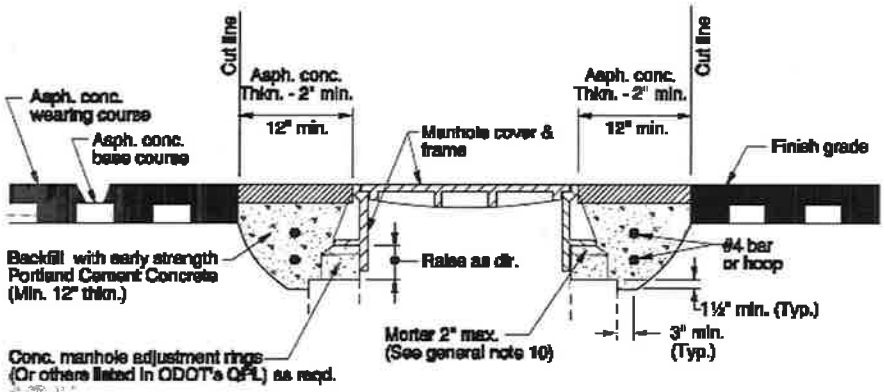


METHOD "A"

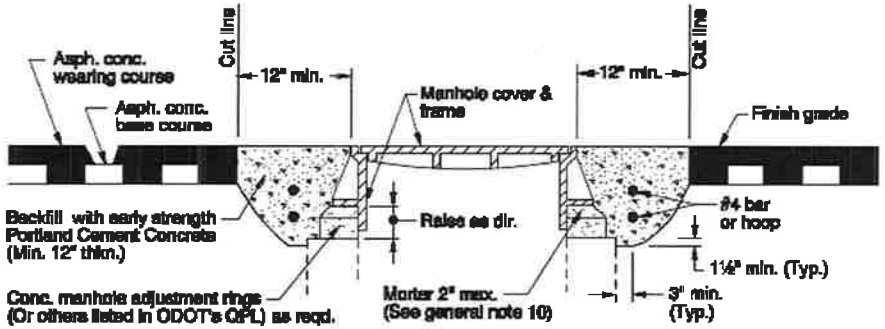


METHOD "B"

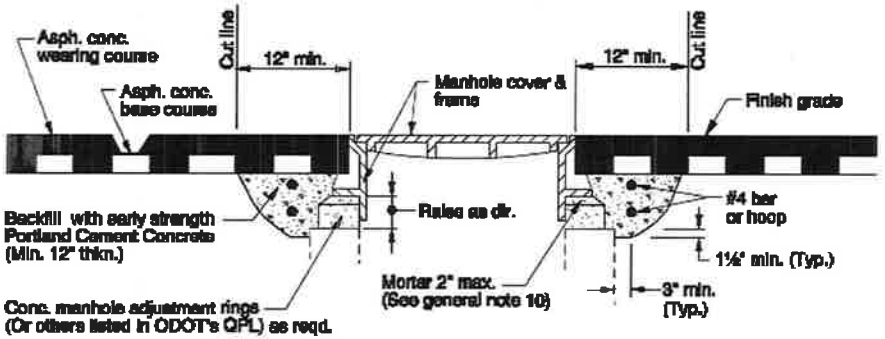


METHOD "C"

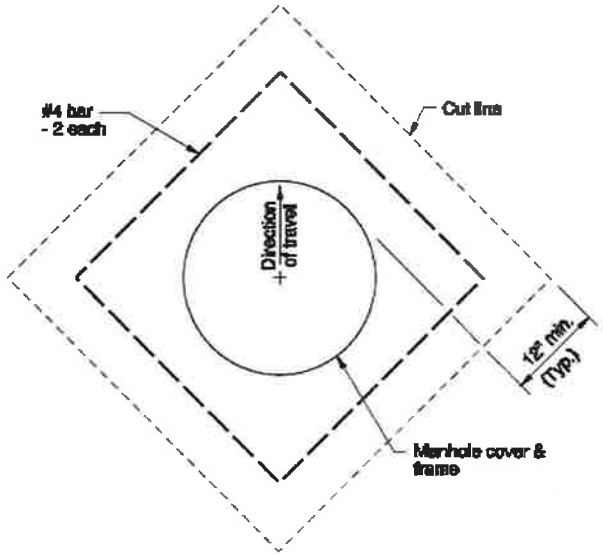


PLAN
SQUARE CUT

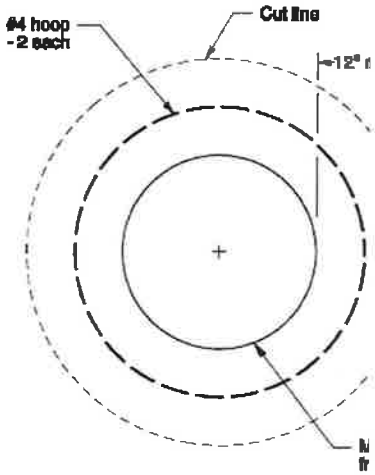


PLAN
CIRCULAR CUT

GENERAL NOTES FOR ALL DETAILS:

1. Cover manhole with building paper and const. asph. conc. base cou wearing courses.
2. Saw cut square or circular excavation around manhole 12" min. fro
3. Raise manhole cover and frame to finish grade by installing conc. m rings and leveling mortar.
4. Backfill with early strength Portland Cement Concrete. All concrete commercial grade concrete.
5. Protect from traffic loading until conc. has cured to 3600 psi.
6. Apply tack coat to edges of existing pavement before installing patch
7. Finish joint with asphalt seal and sand.
8. See Std. Drg. RD336 for manhole steps details.
9. See appropriate manhole standard drawings for details not shown.
10. Use epoxy for synthetic grade rings.
11. See Std. Drg. RD336 for tracer wire details.
12. See Std. Drg. RD356 for manhole cover and frame.

CALC. BOOK NO. _____ BASELINE REPORT DATE _____

NOTE: All material and workmanship shall the current Oregon Standard Speci

*The selection and use of this Standard Drawing, while designed in accordance with generally accepted engineering principles and practices, is the sole responsibility of the user and should not be used without consulting a Registered Professional Engineer.*

OREGON STANDARD D

MANHOLE FRAME AD

2006

| DATE | REVISION DESCR |
|---|---|
| | |

**Effective Date: June 1, 2009 - November 30, 2009**

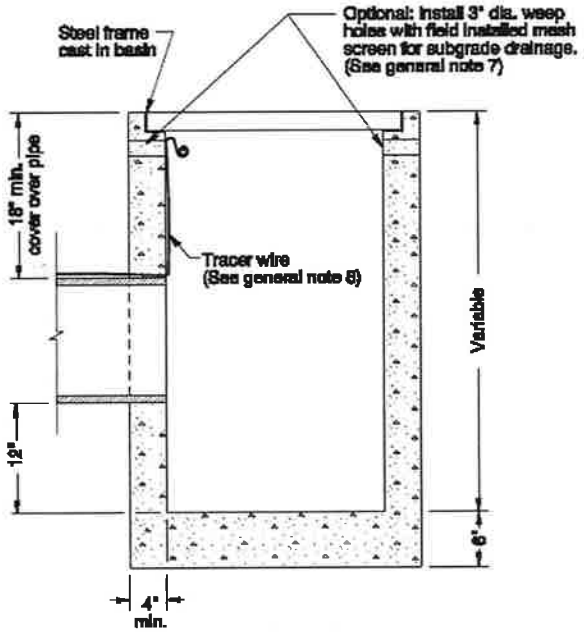


SECTION A-A

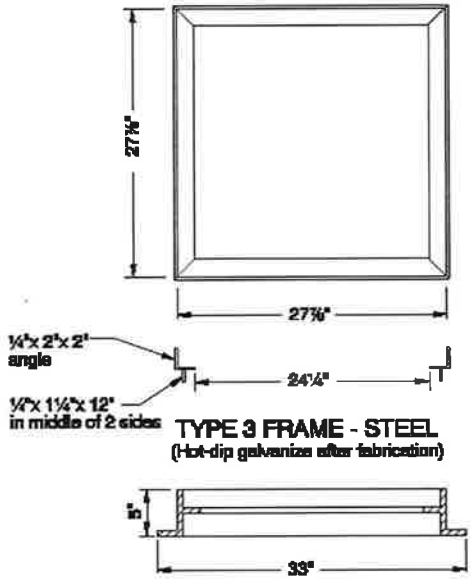


TYPE 3 FRAME - STEEL
(Hot-dip galvanize after fabrication)

OPTIONAL CAST IRON FRAME
FOR A MORTAR-ON TYPE 3 CATCH BASIN

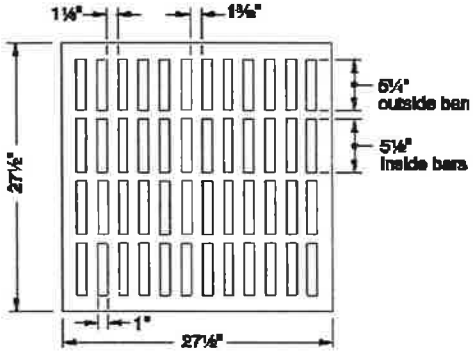


TYPE 3 CATCH BASIN GRATE

PRECAST RISER

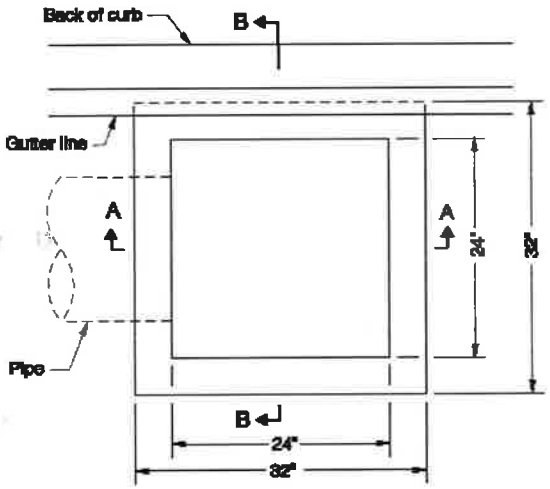


PLAN

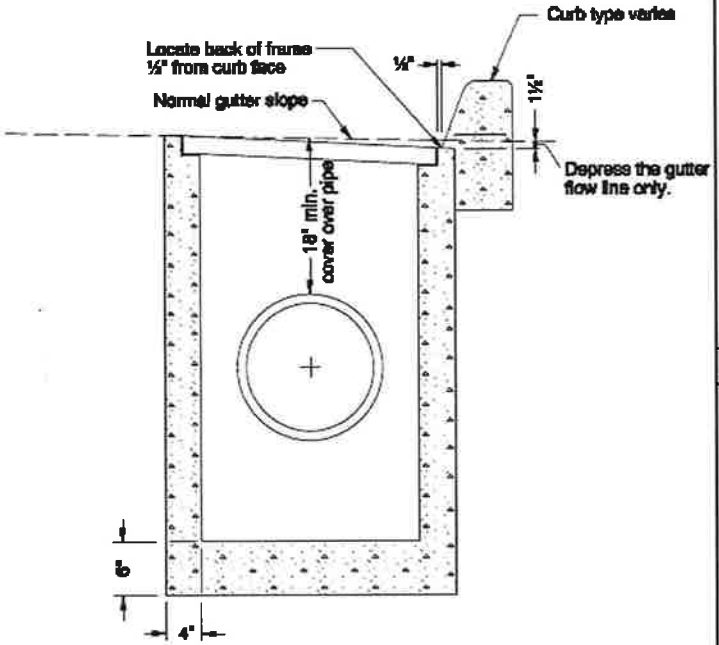


SECTION B-B

GENERAL NOTES FOR ALL DETAILS:

1. Catch basin & grate shall meet H20 loading.
2. All concrete shall be commercial grade concrete.
3. Precast walls shall be a minimum of 4" thick.
4. For use by local agencies on low volume residential facilities as direct
5. Depress gutter flowline and transition gutter as shown in Std. Drg. RI view.
6. Knockouts for precast option.
7. If directed, install 3" dia. weep holes with field installed mesh screen drainage.
8. See Std. Drg. RD336 for tracer wire details.

CALC. BOOK NO. _____ BASELINE REPORT DATE _____

NOTE: All material and workmanship shall the current Oregon Standard Speci

*The selection and use of this Standard Drawing, while designed in accordance with generally accepted engineering principles and practices, is the sole responsibility of the user and should not be used without consulting a Registered Professional Engineer.*

OREGON STANDARD D

TYPE "3" CATCH B
FRAME AND GRA

2008

| DATE | REVISION DESCR |
|---|---|
| | |

**Effective Date: June 1, 2009 - November 30, 2009**

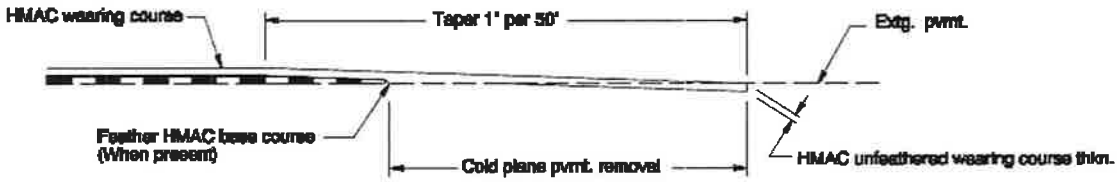


AC PAVEMENT MATCH AT PROJECT ENDS
OR BRIDGE ENDS WHEN NOT OVERLAYING THE BRIDGE

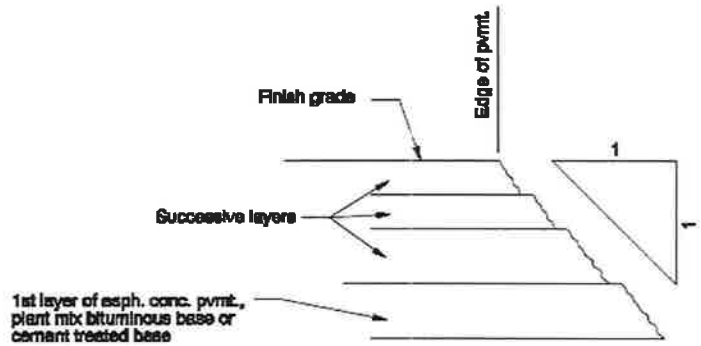


Overall slope of successive layers to be 1:1
Slope of individual layer may be placed steeper

MULTI-LAYER PAVEMENT CONSTRUCTION

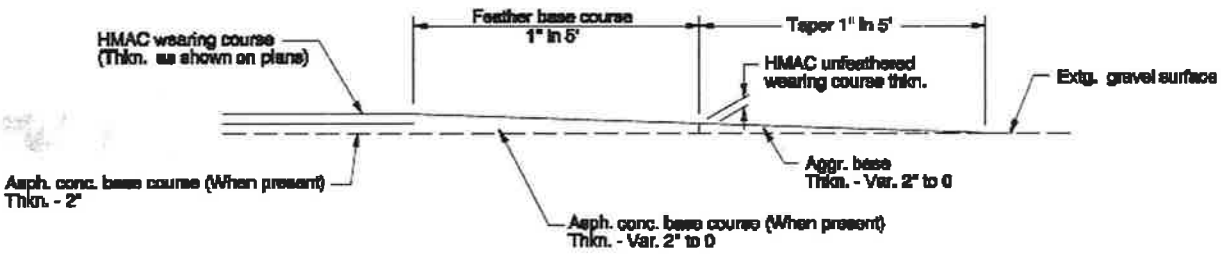


METHOD OF FEATHERING AC PAVEMENT
AT GRAVEL APPROACHES

CALC. BOOK NO. _____

BASELINE REPORT DATE _____

NOTE: All material and workmanship shall
the current Oregon Standard Specif

*The selection and use of this Standard Drawing, while designed in accordance with generally accepted engineering principles and practices, is the sole responsibility of the user and should not be used without consulting a Registered Professional Engineer.*

OREGON STANDARD D

ASPHALT PAVEMENT

2008

| DATE | REVISION DESCR |
|---|---|
| | |

**Effective Date: June 1, 2009 - November 30, 2009**

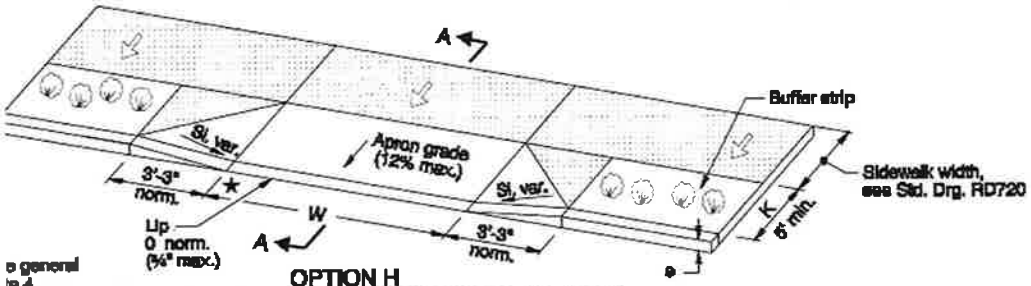


e general
te 4

OPTION H
TYPICAL SEPARATED SIDEWALK DRIVEWAY
(Use Options I or J below if slope requirements shown in Section A-A and general note 2 can't be met)

K = Planter strip width as shown on plans

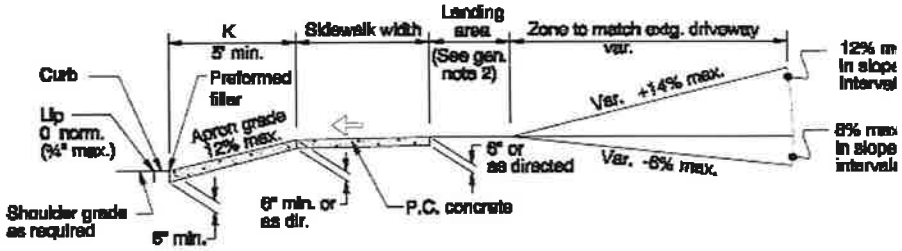


SECTION A-A

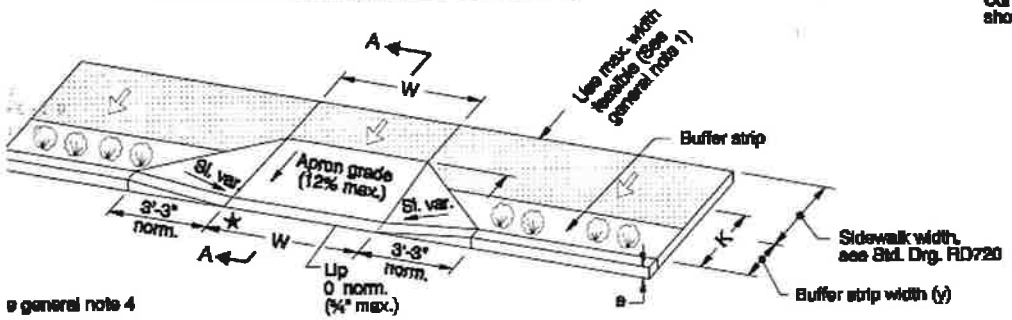


e general note 4

OPTION I
DRIVEWAY ENCROACHES INTO SIDEWALK

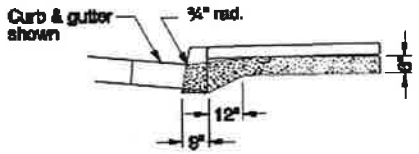


FOR DRIVEWAYS
WITH MONOLITHIC CURB & SIDEWALK
(For details not shown, see Std. Drg. RD700 & Section A-A or B-B, as appropriate.)

W = Width of driveway as exists behind sidewalk

$$K = \frac{(e - Lip) - .02y}{\text{Apron grade} - .02}$$

(See Section A-A & general notes 2 & 8)

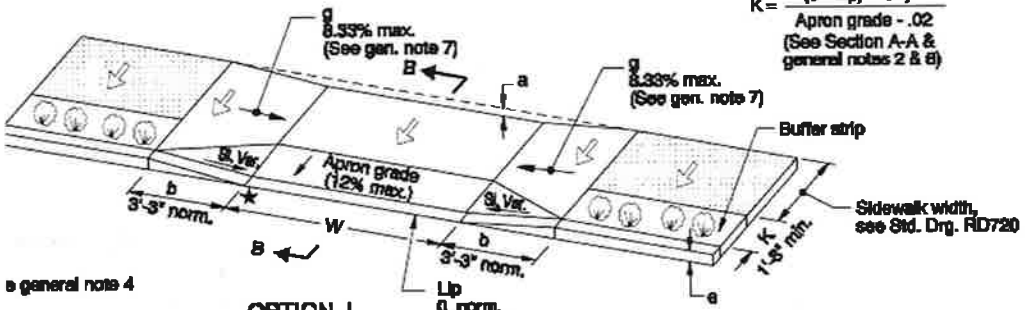


e general note 4

OPTION J
LOWERED SIDEWALK

NOTE:
This drawing is to be used by local agencies to assist them in the design of driveways on their facilities.

- Planter strip width as shown on plans
- e - Lip - K(Apron grade - 0.02)
- = a/g

OTE:
imensions a & b are nominal.
onstruct driveways to meet
quired slopes.

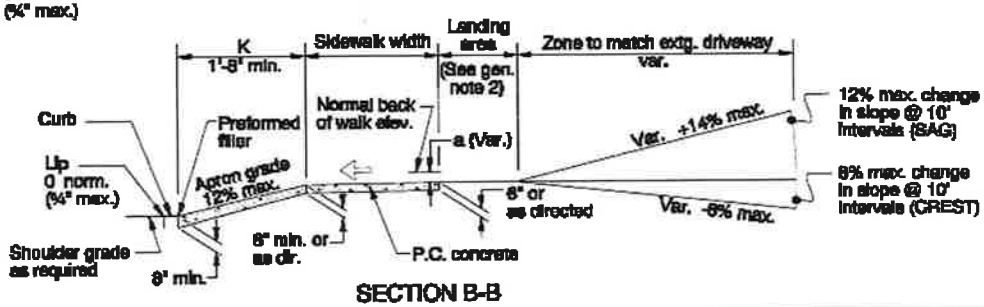


SECTION B-B

GENERAL NOTES FOR ALL DETAILS:

1. 4' unobstructed clear passage with slope of 2% is required behind c 3'-6" width is acceptable where sidewalk width is less than standard
2. Width of driveway (W) and length of landing area shall be as shown or as directed.
3. Where existing driveway is in good condition, and meets slope requ construct only as much as required for satisfactory connection with
4. Check the gutter flow depth at driveway locations to assure that the does not overtop the back of sidewalk at driveway. If overtopping o an inlet at upstream side of driveway or perform other approved de
5. Equations may be calculated using either feet or inches. Use same unit throughout equation.
6. Tooled joints are required at all driveway slope break lines.
7. Longitudinal slopes shown are relative to the running slope of the si
8. Any dimensions except those of general note 1 may be amended by for their use.
9. At least 15' of the driveway behind the sidewalk should be surfaced of gravel onto the sidewalk.
10. Pay limit for driveways is the outer limit of thicker structural section f vehicle loads.
11. See Std. Drg. RD700 for curbs. See Std. Drg. RD720 for sidewalks.
12. Details are based on United States Access Board Standards.

CALC. BOOK NO. _____ BASELINE REPORT DATE _____

NOTE: All material and workmanship shall the current Oregon Standard Speci

*The selection and use of this Standard Drawing, while designed in accordance with generally accepted engineering principles and practices, is the sole responsibility of the user and should not be used without consulting a Registered Professional Engineer.*

OREGON STANDARD D

SEPARATED SIDEWALK OR ALLEYS (OPTION LOCAL JURISDICT

2008

| DATE | REVISION DESCR |
|---|---|
| | |

**Effective Date: June 1, 2009 - November 30, 2009**

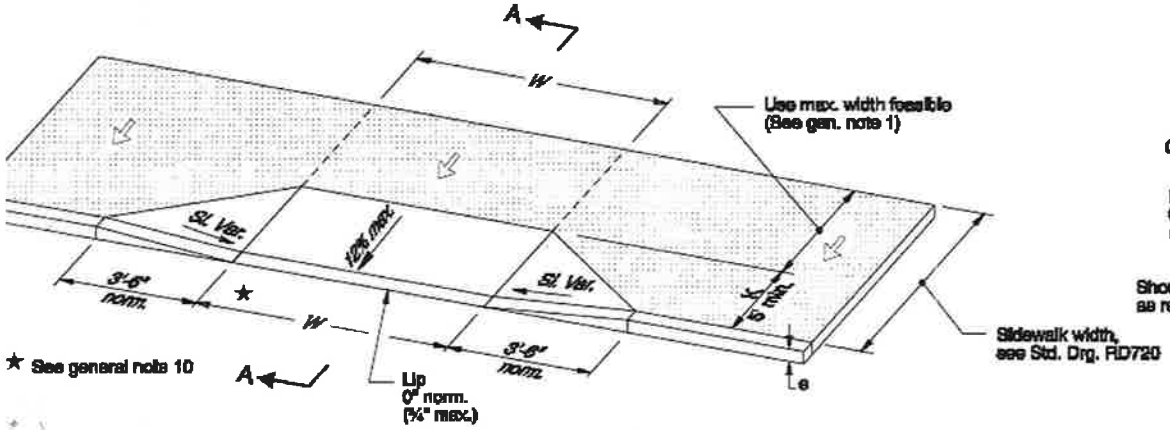


OPTION K
DRIVEWAY IN WIDE SIDEWALK

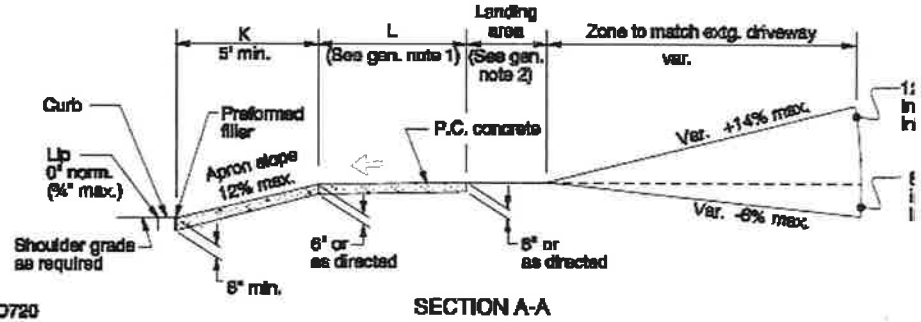


SECTION A-A

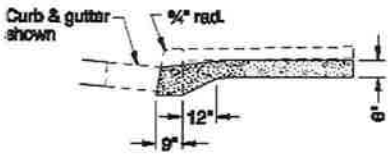


FOR DRIVEWAYS
WITH MONOLITHIC CURB & SIDEWALK
(For details not shown, see Std. Drg. RD700 & Section A-A)

NOTE:
This drawing is to be used by local agencies to assist them in the design of driveways on their facilities.

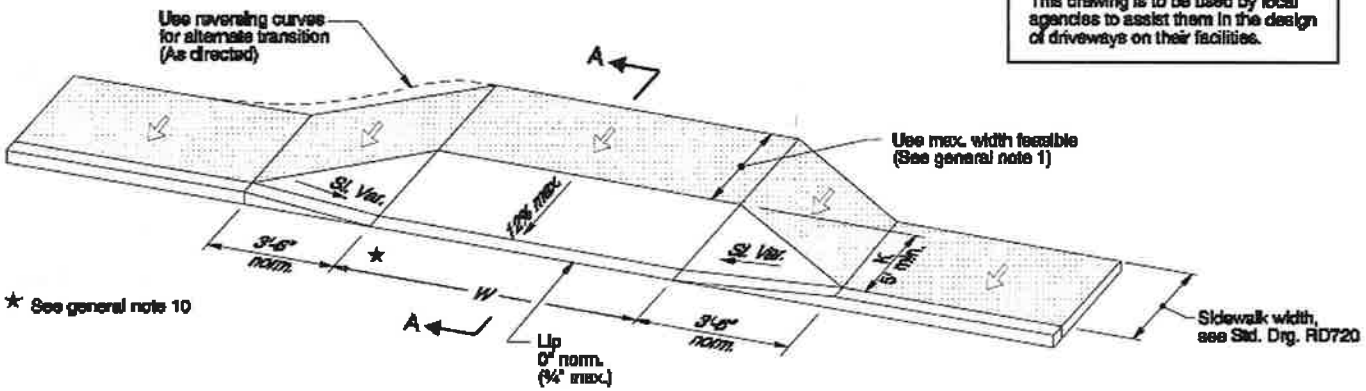


OPTION L
SIDEWALK WRAPPED AROUND DRIVEWAY

⇦ Slope 2% max.

GENERAL NOTES FOR ALL DETAILS:

1. 4' unobstructed clear passage with slope of 2% is required behind c 3'-6" width is acceptable where sidewalk width is less than standard
2. Width of driveway (W) and length of landing area shall be as shown plans or as directed.
3. Where existing driveway is in good condition, and meets slope requ construct only as much as required for satisfactory connection with
4. Tooled joints are required at all driveway slope break lines.
5. Any dimensions except those of general note 1 may be amended b agencies for their use.
6. At least 15' of the driveway behind the sidewalk should be surfaced tracking of gravel onto the sidewalk.
7. Pay limit for driveways is the outer limit of thicker structural section to vehicle loads.
8. See Std. Drg. RD700 for curbs. See Std. Drg. RD720 for sidewalk.
9. Details are based on United States Access Board Standards.
10. Check the gutter flow depth at driveway locations to assure that the does not overtop the back of the sidewalk at driveway. If overtoppin an inlet at upstream side of driveway or perform other approved do

CALC. BOOK NO. _____ BASELINE REPORT DATE _____

NOTE: All material and workmanship shall the current Oregon Standard Speci

*The selection and use of this Standard Drawing, while designed in accordance with generally accepted engineering principles and practices, is the sole responsibility of the user and should not be used without consulting a Registered Professional Engineer.*

OREGON STANDARD D

CURB LINE SIDEWALK I
OR ALLEYS (OPTION
LOCAL JURISDICT

2008

| DATE | REVISION DESCR |
|---|---|
| | |

**Effective Date: June 1, 2009 - November 30, 2009**

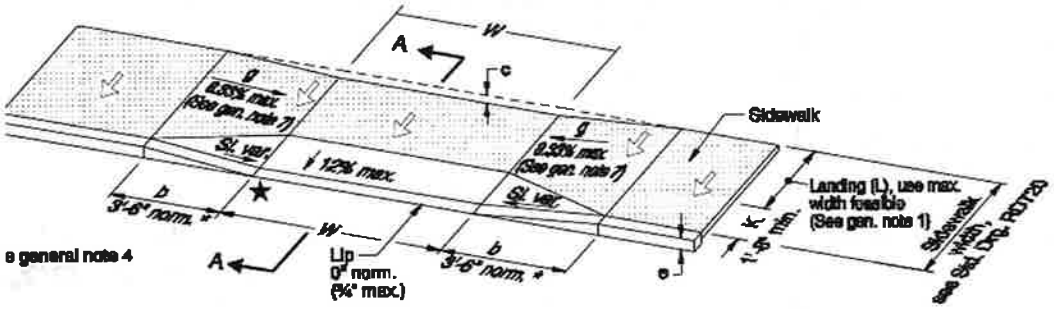


c = e - Lip - K(Apron grade - 0.02)
b = c/g

* May be lengthened to obtain flatter slopes on hills.

## OPTION M
## PARTIALLY LOWERED SIDEWALK

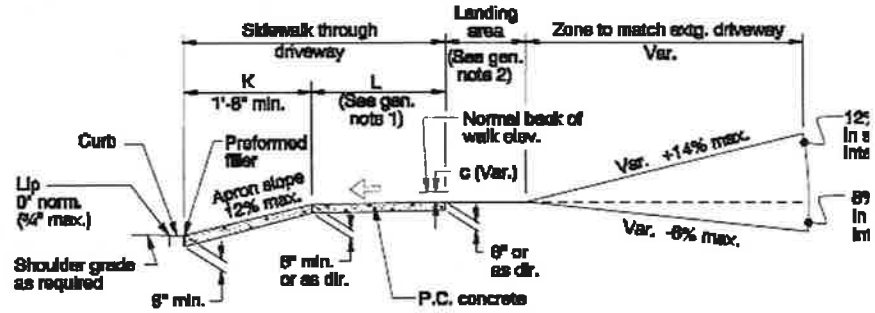


## SECTION A-A

NOTE:
Dimensions b, c, d & f are nominal. Construct driveways to meet required slopes.

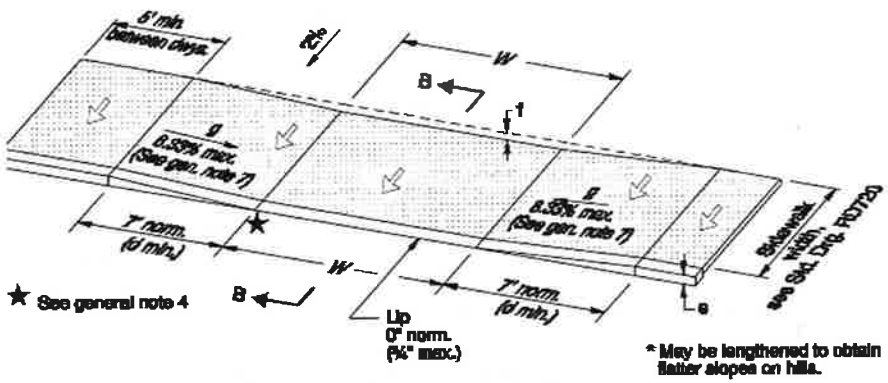


* May be lengthened to obtain flatter slopes on hills.

f = e - Lip
d = f/g

## OPTION N
## FULLY LOWERED SIDEWALK

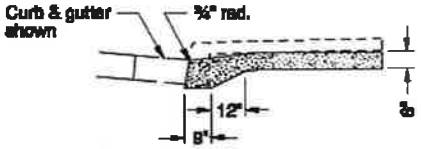


FOR DRIVEWAYS
WITH MONOLITHIC CURB & SIDEWALK
(For details not shown, see Std. Drg. RD700 & Section A-A or B-B, as appropriate.)

GENERAL NOTES FOR ALL DETAILS:

1. 4' unobstructed clear passage with slope of 2% is required behind
   3'-6" width is acceptable where sidewalk width is less than standar
2. Width of driveway (W) and length of landing area shall be as show on plans or as directed.
3. Where existing driveway is in good condition, and meets slope req construct only as much as required for satisfactory connection with
4. Check the gutter flow depth at driveway locations to assure that th does not overtop the back of sidewalk at driveway. If overtopping an inlet at upstream side of driveway or perform other approved de
5. Equations may be calculated using either feet or inches. Use same equation.
6. Tooled joints are required at all driveway slope break lines.
7. Longitudinal slopes shown are relative to the running slope of the
8. Any dimensions except those of general note 1 may be amended b for their use.
9. At least 15' of the driveway behind the sidewalk should be surface tracking of gravel onto the sidewalk.
10. Pay limit for driveways is the outer limit of thicker structural section to vehicle loads.
11. See Std. Drg. RD700 for curbs. See Std. Drg. RD720 for sidewalks
12. Details are based on United States Access Board Standards.

NOTE:
This drawing is to be used by local agencies to assist them in the design of driveways on their facilities.

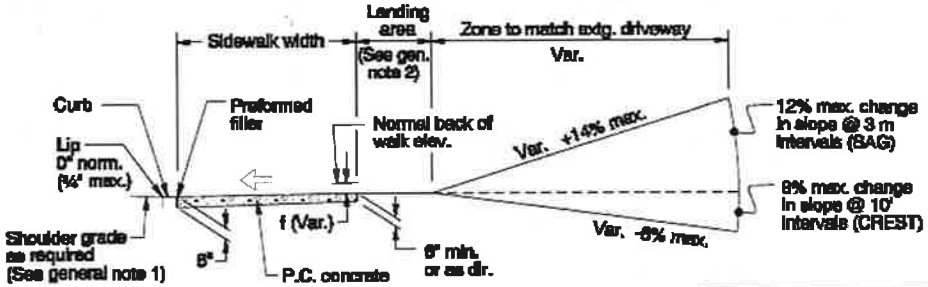


## SECTION B-B

⇦ Slope 2% max.

CALC. BOOK NO. _____ BASELINE REPORT DATE _____

*The selection and use of this Standard Drawing, while designed in accordance with generally accepted engineering principles and practices, is the sole responsibility of the user and should not be used without consulting a Registered Professional Engineer.*

NOTE: All material and workmanship shall the current Oregon Standard Specifi

OREGON STANDARD D

CURB LINE SIDEWALK I
OR ALLEYS (OPTION
LOCAL JURISDICT

2008

| DATE | REVISION DESCR |
|---|---|
| | |

**Effective Date: June 1, 2009 - November 30, 2009**

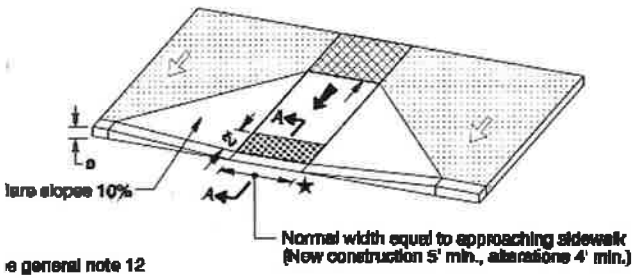


## PERPENDICULAR SIDEWALK RAMP DETAIL

(Use "Parallel Sidewalk Ramp Detail" or "Combination Sidewalk Ramp Detail" when reqd. landing cannot be obtained)

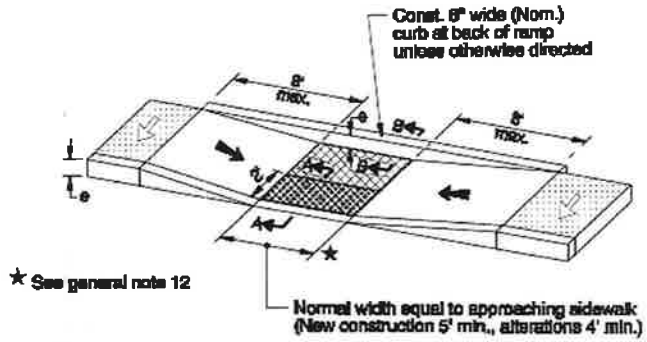


## PARALLEL SIDEWALK RAMP DETAIL

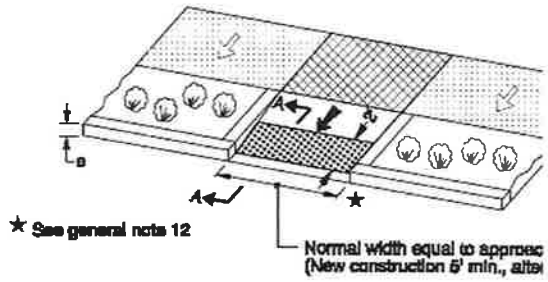


## PERPENDICULAR SIDEWALK RAMP DET
## (THROUGH BUFFER STRIP)

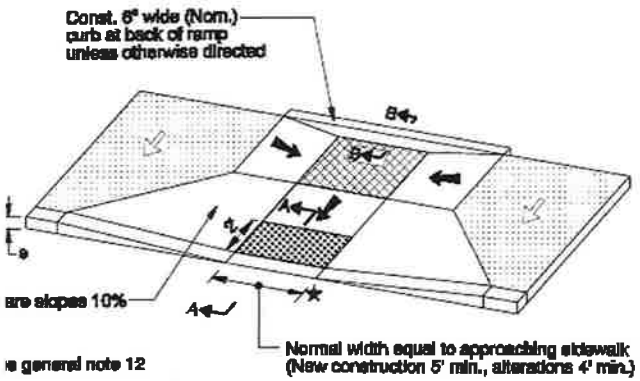


## COMBINATION SIDEWALK RAMP DETAIL

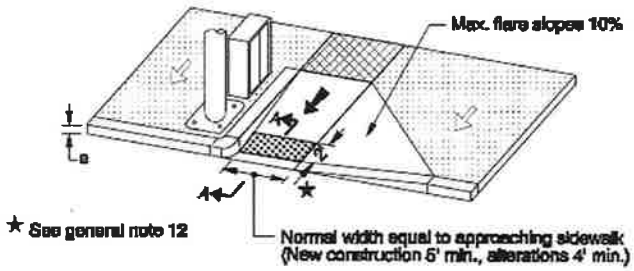


## PERPENDICULAR SIDEWALK RAMP DETAIL (WITH SINGLE FLARE)

(Use "Parallel Sidewalk Ramp Detail" or "Combination Sidewalk Ramp Detail" when reqd. landing cannot be obtained)

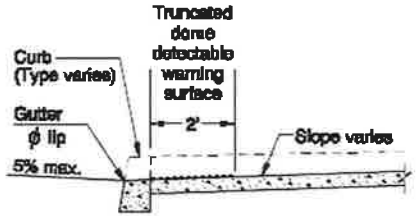


* Matc
** Matc

SECTION A-A

SE

Slope 2% max.

Slope 8.33% max.

Truncated dome detectable warning surface

Landing Area (Min. level area 48" x 48")
For the purposes of this application,
a 2% maximum slope (For drainage) is conside

AL NOTES FOR ALL DETAILS:

walk ramp details are based on United States Access Board Standards.

Std. Drg. RD700 for curbs. See Std. Drg. RD720 for sidewalks.
Std. Drgs. TM503 & TM530 for crosswalk markings, widths, etc.

ad joints are required at all sidewalk ramp slope break lines.

walk curb ramp slopes shown are relative to the true level horizon (Zero bubble).

a truncated dome detectable warning surface in the lower 2' adjacent to traffic of
t of ramp only. For details not shown, see Std. Drg. RD759.

flares that are not part of the path of travel may be any slope. Check the gutter flow
n to assure that the design flood does not overtop the back of sidewalk. If overtopping
rs place an inlet at upstream side or perform other approved design mitigation.

7. Sidewalk flare is not necessary where the ramp is protected from pedestrian cross-travel.
8. For the purpose of this drawing, a curb ramp is considered "perpendicular" if the angle between the longitudinal axis of the ramp and a line tangent to the curb at the ramp center is 75° or greater.
9. Ramps for paths intersecting a roadway should be full width of path, excluding flares. When a ramp is used to provide bicycle access from a roadway to a sidewalk, the ramp should be 8' wide.
10. In alterations, curb ramp slope(s) may be 10% for a max. rise of 6", or 12.5% for a max. rise of 3".
11. For sidewalk ramp placement options, see Std. Drgs. RD756 & RD757.
12. Check the gutter flow depth at driveway locations to assure that the design flood does not overtop the back of sidewalk at driveway. If overtopping occurs place an inlet at upstream side of driveway or perform other approved design mitigation.

CALC. BOOK NO. N/A

BASELINE REPORT DATE 07-JUL-

*The selection and use of this Standard Drawing, while designed in accordance with generally accepted engineering principles and practices, is the sole responsibility of the user and should not be used without consulting a Registered Professional Engineer.*

NOTE: All material and workmanship shall the current Oregon Standard Specif

OREGON STANDARD D

SIDEWALK RAMP D

2008

| DATE | REVISION DESCR |
|---|---|
| | |

**Effective Date: June 1, 2009 - November 30, 2009**

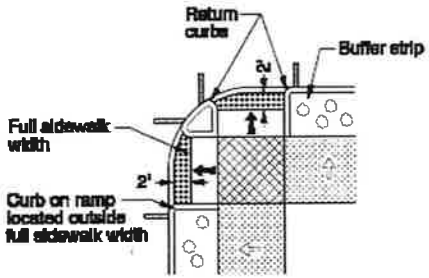


**OPTION A**
**PERPENDICULAR RAMP WITH LANDSCAPED BUFFER STRIP**

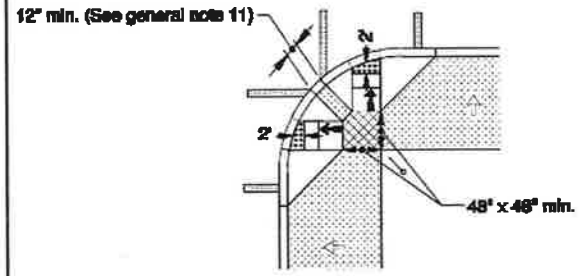


**OPTION B**
**PERPENDICULAR RAMP**
**(FOR WIDE SIDEWALKS)**

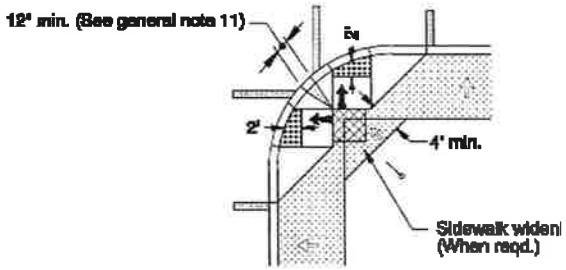


**OPTION C**
**PERPENDICULAR RAMP**
**(FOR NARROW SIDEWALKS)**

Marked or intended crossing location

Slope 2% max.

Slope 8.33% max.

Truncated dome detectable warning surface

Landing Area (Minimum level area 48" x 48")
For the purposes of this application,
a 2% maximum slope (For drainage) is considered level

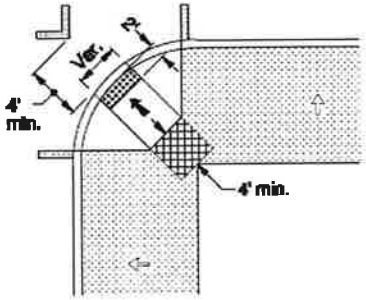


**OPTION D**
**DIAGONAL RAMP**
**(FOR WIDE SIDEWALKS)**
Use in alterations only and when site constraints prohibit installing two ramps

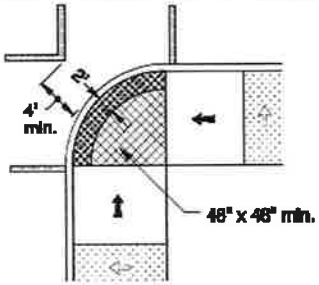


**OPTION E**
**DIAGONAL-PARALLEL RAMP**
**(FOR SIDEWALK WIDTHS ≥ RADIUS)**
Use in alterations only and when site constraints prohibit installing two ramps

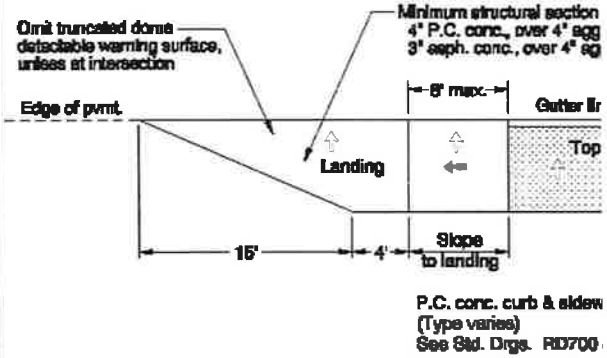


**OPTION F**
**SIDEWALK RAMP AND LANDING**
**(FOR ENDS OF SIDEWALKS)**

AL NOTES FOR ALL DETAILS:

walk ramp details are based on United States Access Board Standards.

Std. Drg. RD700 for curbs. See Std. Drg. RD720 for sidewalks.
Std. Drgs. TM503 & TM530 for crosswalk markings, widths, etc.
Std. Drg. RD755 for sidewalk ramp details.

ed joints are required at all sidewalk ramp slope break lines.

walk curb ramp slopes shown are relative to the true level horizon (Zero bubble).

a truncated dome detectable warning surface in the lower 2' adjacent to traffic
road of ramp only. For details not shown, see Std. Drg. RD759.

flares that are not part of the path of travel may be any slope. Check the gutter flow
h to assure that the design flood does not overtop the back of sidewalk. If overtopping
rs place an inlet at upstream side or perform other approved design mitigation.

7. Sidewalk flare is not necessary where the ramp is protected from pedestrian cross-travel.
8. For the purpose of this drawing, a curb ramp is considered "perpendicular" if the angle between the longitudinal axis of the ramp and a line tangent to the curb at the ramp center is 75° or greater.
9. Ramps for paths intersecting a roadway should be full width of path, excluding flares. When a ramp is used to provide bicycle access from a roadway to a sidewalk, the ramp should be 8' wide.
10. In alterations, curb ramp slope(s) may be 10% for a max. rise of 6", or 12.5% for a max. rise of 3'.
11. When 2 curb ramps are immediately adjacent as in Options B & C, the curb exposure (s) between the adjacent side flares may range between 3" and full design exposure.

CALC. BOOK NO. N/A

*The selection and use of this Standard Drawing, while designed in accordance with generally accepted engineering principles and practices, is the sole responsibility of the user and should not be used without consulting a Registered Professional Engineer.*

BASELINE REPORT DATE 07-JUL-

NOTE: All material and workmanship shall the current Oregon Standard Specifi

OREGON STANDARD D

**SIDEWALK RAMP PLACEM**
**CURB RADII ≤**

2006

| DATE | REVISION DESCR |
|---|---|
| | |

**Effective Date: June 1, 2009 - November 30, 2009**

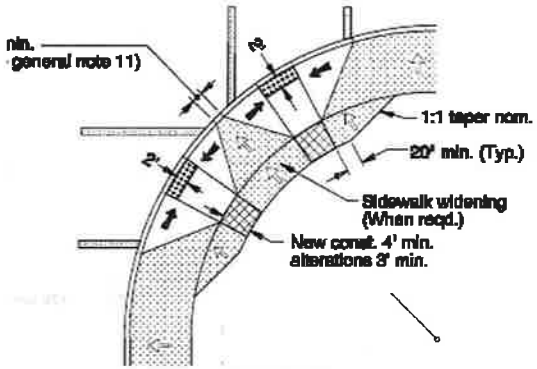


**OPTION G**
**PERPENDICULAR RAMPS**
**(FOR NARROW SIDEWALKS)**

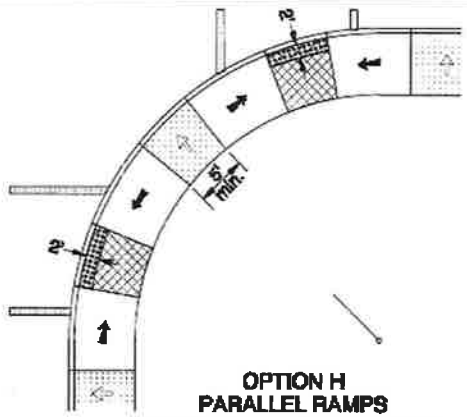


**OPTION H**
**PARALLEL RAMPS**
**(FOR NARROW SIDEWALKS)**

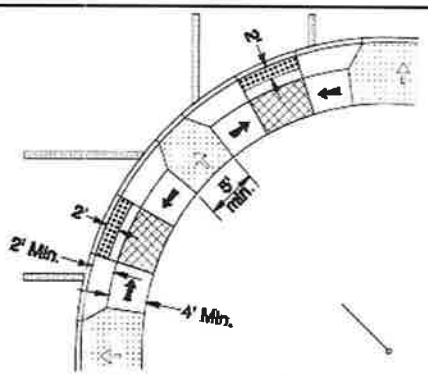


**OPTION I**
**COMBINATION RAMPS**
**(FOR WIDE SIDEWALKS)**

Marked or intended crossing location

Slope 2% max.

Slope 8.33% max.

Truncated dome detectable warning surface

Landing Area (Min. level area 48" x 48")
For the purposes of this application,
a 2% maximum slope (For drainage) is considered level

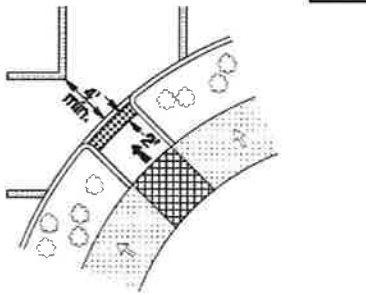


**OPTION J**
**DIAGONAL RAMP WITH**
**LANDSCAPED BUFFER STRIP**

Use in alterations only and when site constraints prohibit installing two ramps

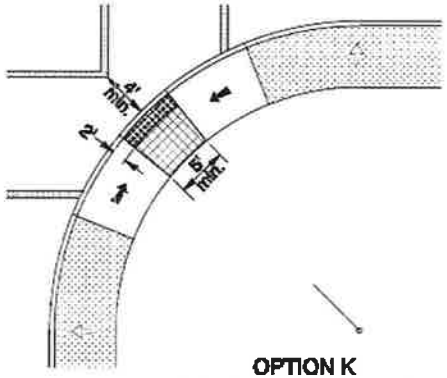


**OPTION K**
**DIAGONAL-PARALLEL RAMP**
**(FOR NARROW SIDEWALKS)**

Use in alterations only and when site constraints prohibit installing two ramps

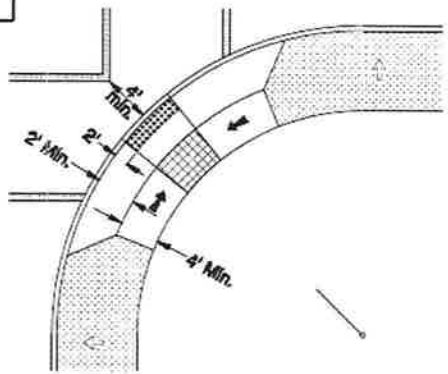


**OPTION L**
**DIAGONAL-COMBINATION RAMP**
**(FOR WIDE SIDEWALKS)**

Use in alterations only and when site constraints prohibit installing two ramps

**AL NOTES FOR ALL DETAILS:**

walk ramp details are based on United States Access Board Standards.

Std. Drg. RD700 for curbs. See Std. Drg. RD720 for sidewalks.
Std. Drgs. TM503 & TM530 for crosswalk markings, widths, etc.
Std. Drg. RD756 for sidewalk ramp details.

d joints are required at all sidewalk ramp slope break lines.

walk curb ramp slopes shown are relative to the true level horizon (Zero bubble).

truncated dome detectable warning surface in the lower 2' adjacent to traffic
oat of ramp only. For details not shown, see Std. Drg. RD759.

flares that are not part of the path of travel may be any slope. Check the gutter flow
to assure that the design flood does not overtop the back of sidewalk. If overtopping
s place an inlet at upstream side or perform other approved design mitigation.

7. Sidewalk flare is not necessary where the ramp is protected from pedestrian cross-travel.
8. For the purpose of this drawing, a curb ramp is considered "perpendicular" if the angle between the longitudinal axis of the ramp and a line tangent to the curb at the ramp center is 75° or greater.
9. Ramps for paths intersecting a roadway should be full width of path, excluding flares. When a ramp is used to provide bicycle access from a roadway to a sidewalk, the ramp should be 8' wide.
10. In alterations, curb ramp slope(s) may be 10% for a max. rise of 8", or 12.5% for a max. rise of 3".
11. When 2 curb ramps are immediately adjacent as in Option G, the curb exposure (e) between the adjacent side flares may range between 3" and full design exposure.

CALC. BOOK NO. N/A

*The selection and use of this Standard Drawing, while designed in accordance with generally accepted engineering principles and practices, is the sole responsibility of the user and should not be used without consulting a Registered Professional Engineer.*

BASELINE REPORT DATE 09-JUL-

NOTE: All material and workmanship shall the current Oregon Standard Specifi

OREGON STANDARD D

**SIDEWALK RAMP PLACEM**
**CURB RADII >**

2008

| DATE | REVISION DESCR |
|---|---|
| | |

**Effective Date: June 1, 2009 - November 30, 2009**

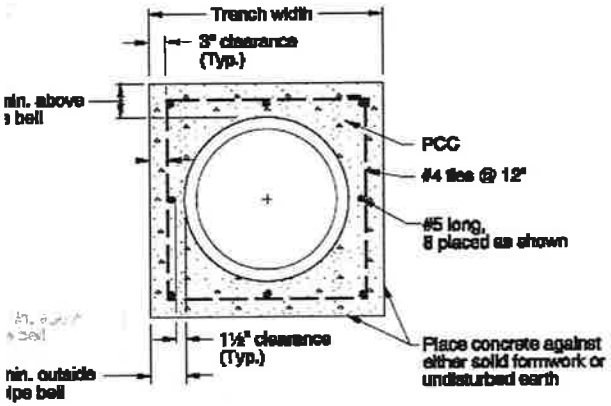


CONCRETE ENCASEMENT DETAIL

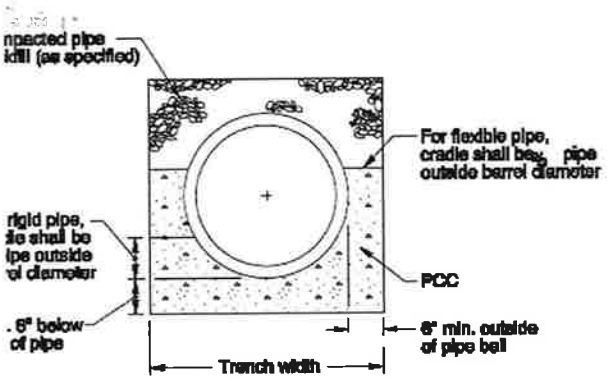


CRADLE DETAIL

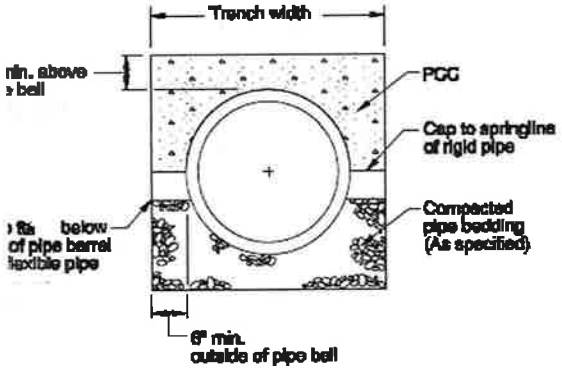


CAP DETAIL

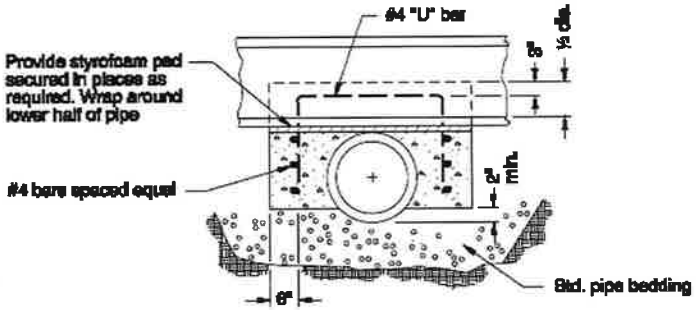


SECTION C-C

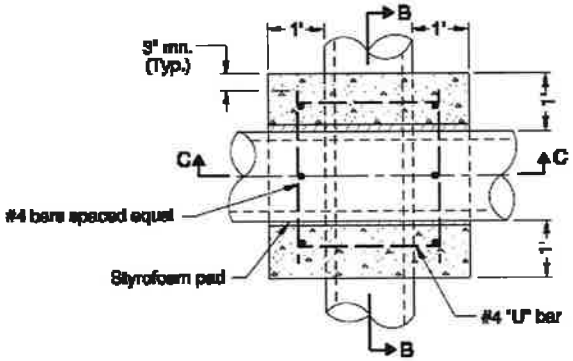


PLAN

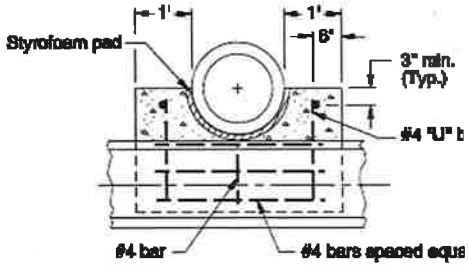


SECTION B-B

SADDLE

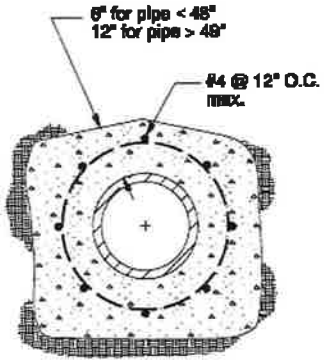


SECTION A-A

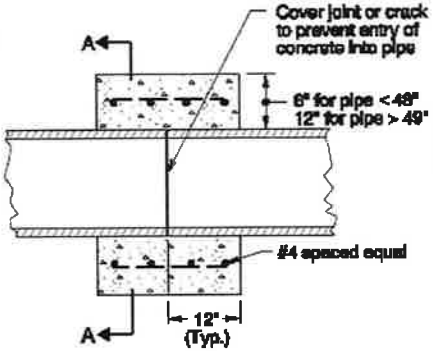


PLAN

REINFORCED CONCRETE COLLAR

GENERAL NOTES FOR ALL DETAILS:

1. All concrete shall be commercial grade concrete.
2. End all reinforcing 3" clear of ground, forms or top surface.
3. Trowel finish top surface of saddle, and cradle.
4. Reinforcement shall be # 4 vertical & horizontal bars as shown.

CALC. BOOK NO. N/A

BASELINE REPORT DATE 11-DEC-

NOTE: All material and workmanship shall the current Oregon Standard Specifi

*The selection and use of this Standard Drawing, while designed in accordance with generally accepted engineering principles and practices, is the sole responsibility of the user and should not be used without consulting a Registered Professional Engineer.*

OREGON STANDARD D

CONCRETE ENCAS
CRADLE, AND CAP

2008

| DATE | REVISION DESCR |
|---|---|
| | |

**Effective Date: June 1, 2009 - November 30, 2009**

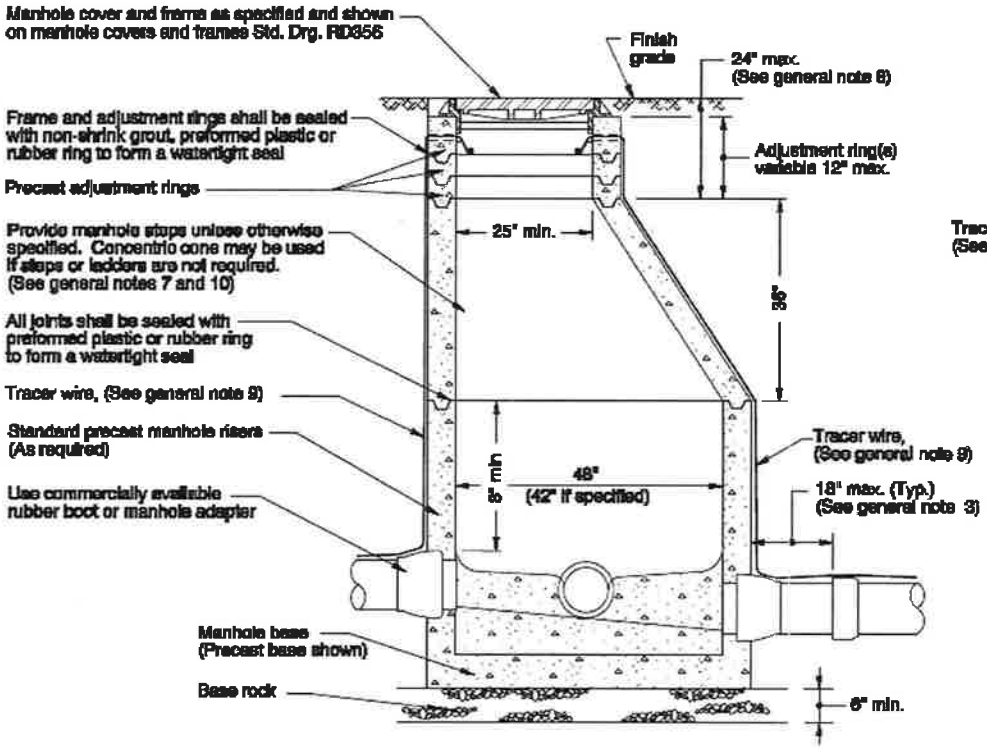


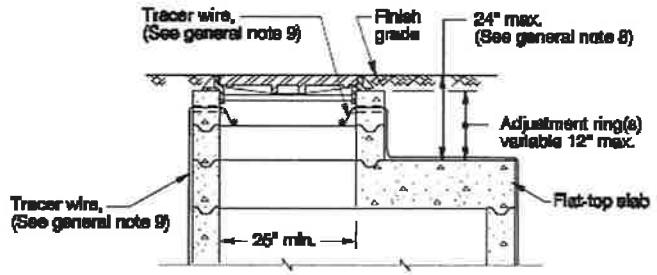


GENERAL NOTES FOR ALL DETAILS:

1. All precast sections shall conform to requirements of ASTM C478.
2. Standard precast manhole section diameter shall be 48". Use 42" i the Engineer. Maximum pipe diameter 24".
3. All connecting pipes shall have a flexible, gasketted, and unrestrain 18" of manhole wall.
4. See Std. Drg. RD344 for manhole base section.
5. This detail limited to interior drop of 24". See Std. Drgs. RD350 or I manhole details for drops in excess of 24".
6. Use flat top for shallow manhole where directed. (See Std. Drg. RD
7. See Std. Drg. RD336 for manhole steps details.
8. Adjust 24" max.
9. See Std. Drg. RD338 for tracer wire details.
10. Ladder with notched safety rail and removable extension is reqd. fo depths between 24'-0" and 50'-0".

CALC. BOOK NO. _____ BASELINE REPORT DATE _____

NOTE: All material and workmanship shall the current Oregon Standard Specif

*The selection and use of this Standard Drawing, while designed in accordance with generally accepted engineering principles and practices, is the sole responsibility of the user and should not be used without consulting a Registered Professional Engineer.*

OREGON STANDARD D

STANDARD
SANITARY SEWER I

2008

| DATE | REVISION DESCR |
|---|---|
| | |

**Effective Date: June 1, 2009 - November 30, 2009**

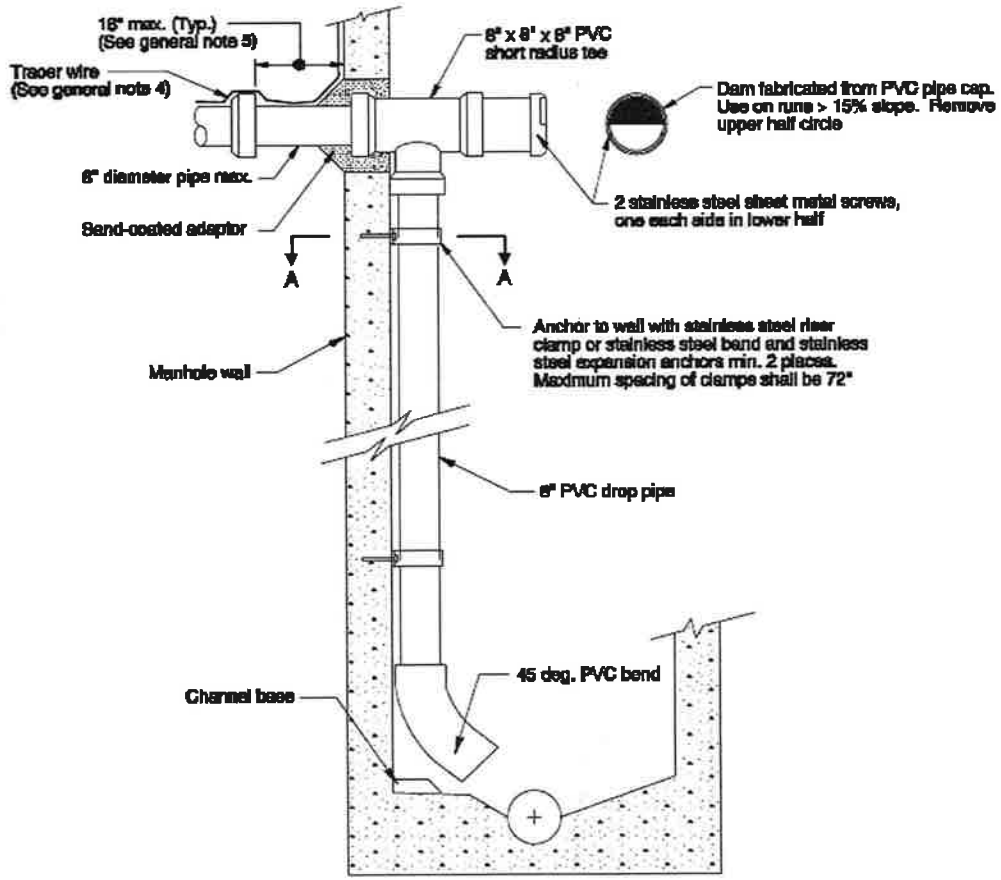


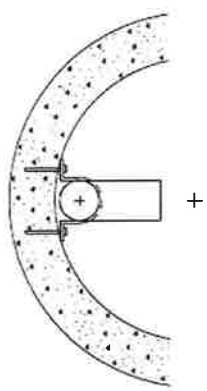

SECTION A-A

## CLAMP DETAIL

GENERAL NOTES FOR ALL DETAILS:

1. Only one inside drop per manhole.
2. PVC shall be ASTM D3034 SDR35.
3. See Std. Drg. RD336 for manhole steps details.
4. See Std. Drg. RD336 for tracer wire details.
5. All connecting pipes shall have a flexible, gasketted, and unrestrai 18" of manhole wall.
6. See appropriate manhole standard drawings for details not shown.

CALC. BOOK NO. _____ BASELINE REPORT DATE _____

NOTE: All material and workmanship shall the current Oregon Standard Specifi

*The selection and use of this Standard Drawing, while designed in accordance with generally accepted engineering principles and practices, is the sole responsibility of the user and should not be used without consulting a Registered Professional Engineer.*

OREGON STANDARD D

**SANITARY SEW**
**PIPED INSIDE DROP CC**
**FOR MANHOLI**

2008

| DATE | REVISION DESCR |
|---|---|
| | |

**Effective Date: June 1, 2009 - November 30, 2009**

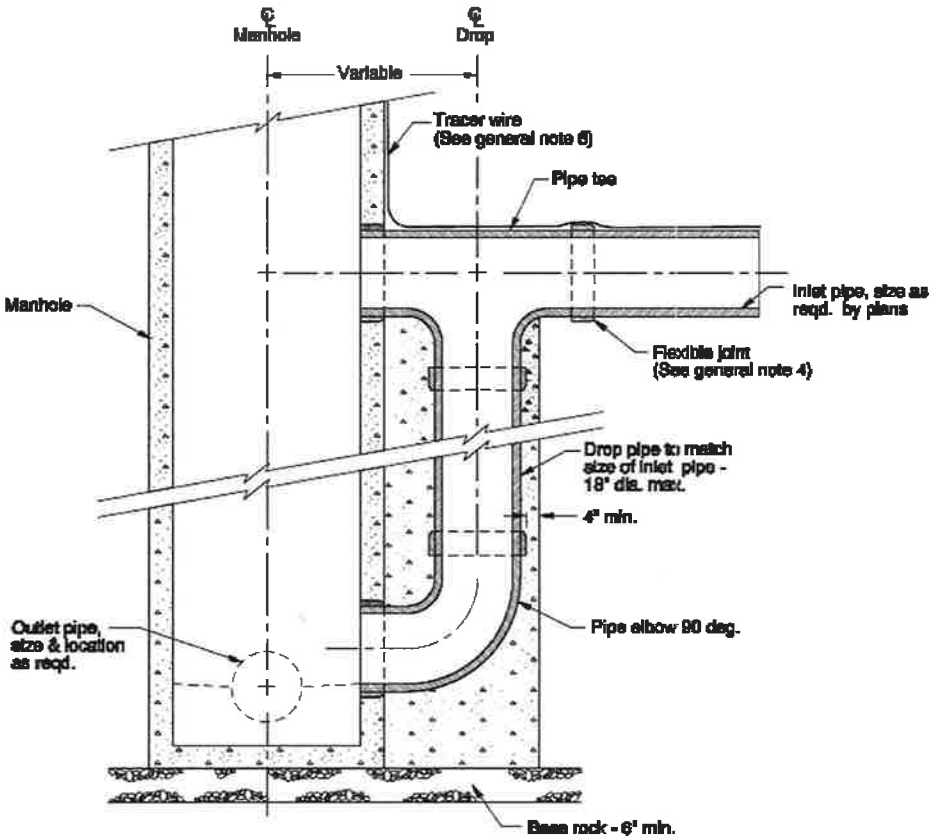


SECTION A-A

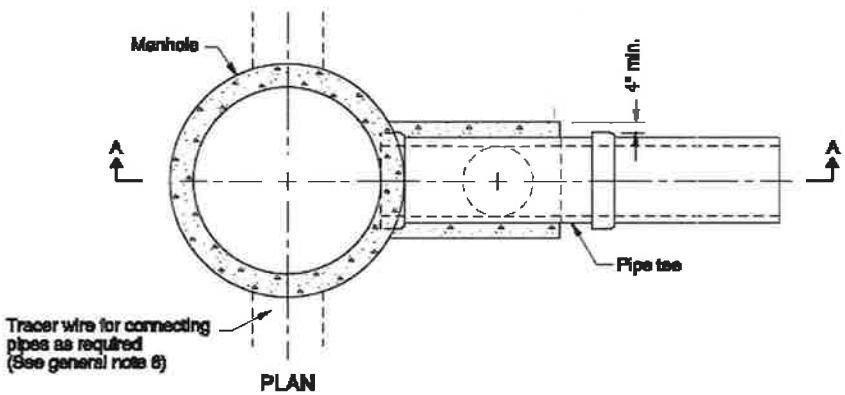


PLAN

GENERAL NOTES FOR ALL DETAILS:

1. See appropriate manhole standard drawings for details not shown.
2. Concrete encasement to be commercial grade concrete.
3. Pipe material as required by plans.
4. All connecting pipes shall have a flexible, gasketted, and unrestrai 6" of concrete encasement.
5. See Std. Drg. RD336 for manhole steps details.
6. See Std. Drg. RD336 for tracer wire details.

CALC. BOOK NO. _____ BASELINE REPORT DATE _____

NOTE: All material and workmanship shall the current Oregon Standard Specifi

*The selection and use of this Standard Drawing, while designed in accordance with generally accepted engineering principles and practices, is the sole responsibility of the user and should not be used without consulting a Registered Professional Engineer.*

OREGON STANDARD D

OUTSIDE DROP MA

2008

| DATE | REVISION DESCR |
|---|---|
| | |

**Effective Date: June 1, 2009 - November 30, 2009**

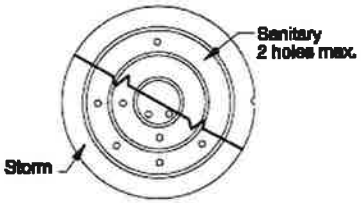


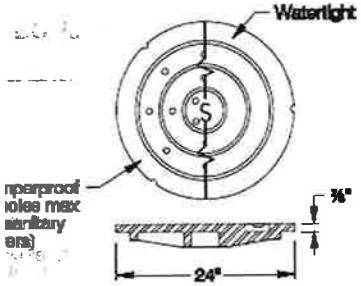


Cast iron tamperproof & watertight
(frames available in standard or suburban pattern)

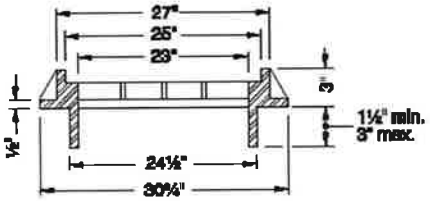


CAST IRON SUBURBAN FRAME

For use on local streets only, as specified

## SUBURBAN MANHOLE COVER & FRAME

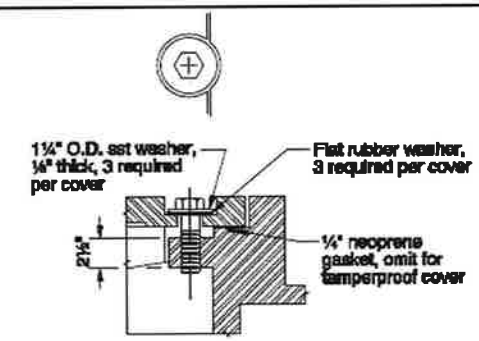


NOTE:
3 reqd., ¼" x 1¼" pentagonal or hexagonal head, bronze or stainless steel. Install frame so that one bolt boss is located over the manhole ladder.

BOLT-DOWN DETAIL

(FOR TAMPERPROOF AND WATERTIGHT)

* Std. depths 1½", 2", 2½" & 3"
Matl. to be grey cast iron ASTM A-48, Class 30. Tolerance on non-machined surfaces to be ±0.06", see general note 6

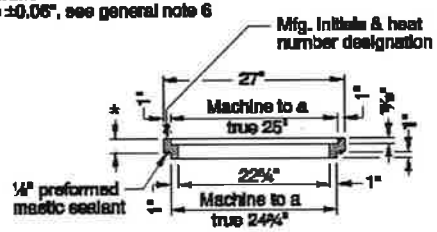


SECTION C-C

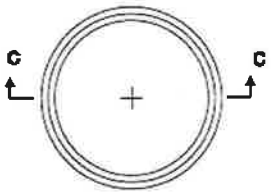

MANHOLE ADJUSTMENT RING

For use with Standard Manhole Frame

## STANDARD MANHOLE COVER & FRAME

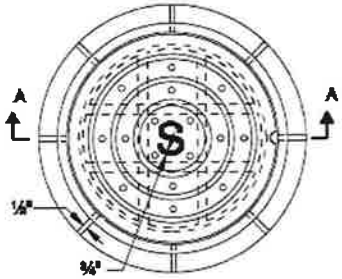

NOTE:
Coat outside of frame with asphalt, where frame is to be placed in conc. pvmt., conc. gutter, or walk.

PLAN

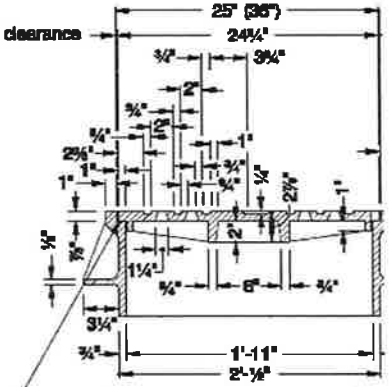


Cover & frame to be machined to a true bearing all around.

SECTION A-A

36" min. diameter cover is reqd. for manh depths of 20' or greater. (See general no

MANHOLE FRAME

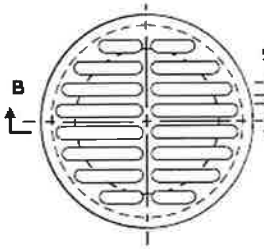

PLAN

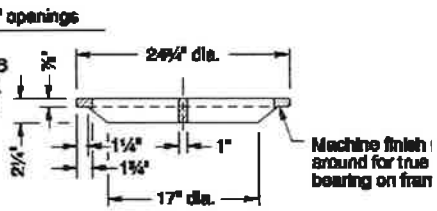


SECTION B-B

MANHOLE GRATE

For use with Standard Manhole Frame

GENERAL NOTES FOR ALL DETAILS:

1. Tamperproof covers reqd. on sanitary or storm drain manhole where located in pedestrian ways or easement areas. Covers for sanitary manholes shall have 2 holes maximum.
2. Watertight covers required if located where cover may be submerged. (no holes)
3. Covers and frames shall be stamped with manufacturer's initials, heat number and point of origin.
4. Ladder with notched safety rail and removable extension is reqd. for manholes with depths between 24'-0" and 50'-0"
5. See Std. Drg. RD360 for manhole frame adjustment.
6. See ODOT's QPL for alternate manhole adjustment rings.

CALC. BOOK NO. _____ BASELINE REPORT DATE _____

*The selection and use of this Standard Drawing, while designed in accordance with generally accepted engineering principles and practices, is the sole responsibility of the user and should not be used without consulting a Registered Professional Engineer.*

NOTE: All material and workmanship shall the current Oregon Standard Specif

OREGON STANDARD D

MANHOLE COVERS AN

2008

| DATE | REVISION DESCR |
|---|---|
| | |

**Effective Date: June 1, 2009 - November 30, 2009**

CAST IRON COVER

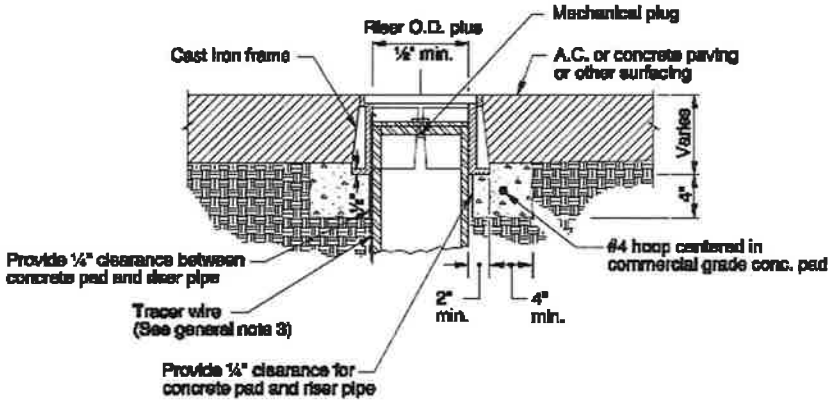


CAST IRON FRAME

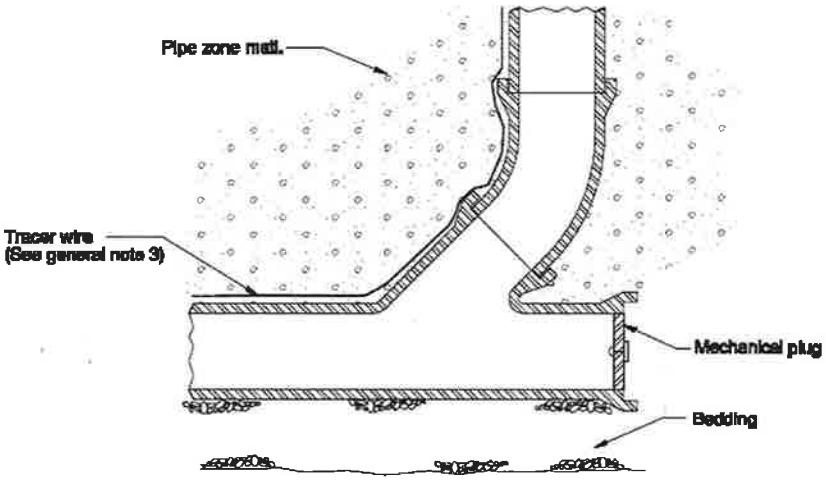


CLEANOUT

GENERAL NOTES FOR ALL DETAILS:

1. Casting shall meet H20 load requirement.
2. Provide riser size and material to match carrier pipe.
3. See Std. Drg. RD836 for tracer wire details.
4. All concrete shall be commercial grade concrete.

CALC. BOOK NO. _____

BASELINE REPORT DATE _____

NOTE: All material and workmanship shall the current Oregon Standard Speci

*The selection and use of this Standard Drawing, while designed in accordance with generally accepted engineering principles and practices, is the sole responsibility of the user and should not be used without consulting a Registered Professional Engineer.*

OREGON STANDARD D

SANITARY CLEAI

2008

| DATE | REVISION DESCR |
|---|---|
| | |

**Effective Date: June 1, 2009 - November 30, 2009**

# THRUST BLOCKING

## CONCRETE THRUST BLOCKING (HORIZONTAL)

| | | Thrust (T) at fittings in Pounds | | | | |
|---|---|---|---|---|---|---|
| | | A | B | C | D | E |
| IPE IA. | Table Pressure PSI | Tee & Dead Ends | 90 deg Bend | 45 deg Bend | 22.5 deg Bend | 11.25 deg Bend |
| 4" | 250 | 3140 | 4440 | 2405 | 1225 | 615 |
| 6" | 250 | 7070 | 9995 | 5410 | 2760 | 1385 |
| 8" | 250 | 12565 | 17770 | 9620 | 4905 | 2465 |
| 10" | 250 | 19635 | 27770 | 15030 | 7660 | 3850 |
| 12" | 250 | 28275 | 39985 | 21640 | 11030 | 5545 |
| 14" | 250 | 38485 | 54425 | 29455 | 15015 | 7545 |
| 16" | 250 | 50265 | 71085 | 38470 | 19615 | 9855 |

| Soil Type | Soil Bearing Capacity (B) in PSI |
|---|---|
| uck, peat, etc. | 0 |
| oft Clay | 1000 |
| and | 2000 |
| and and gravel | 3000 |
| and and gravel cemented with clay | 4000 |
| and shale | 10,000 |

## CONCRETE BLOCKING FOR CONVEX VERTICAL BENDS

DIMENSION TABLE

| PIPE DIA. in. | Table Pressure PSI | Bend Angle (deg) | Concrete Volume (cy) | Cube Size (ft) | Stirrup Dia. (in) | Stirrup Embmt. (in) | Stirrup Bar # |
|---|---|---|---|---|---|---|---|
| 4" | 250 | 11.25 | 0.21 | 1.8 | ⅝ | 17 | 5 |
| | | 22.5 | 0.43 | 2.3 | | | |
| | | 45 | 0.77 | 2.8 | | | |
| 6" | 250 | 11.25 | 0.48 | 2.4 | ⅝ | 17 | 5 |
| | | 22.5 | 0.95 | 3.0 | | | |
| | | 45 | 1.79 | 3.6 | | | |
| 8" | 250 | 11.25 | 0.86 | 2.9 | ⅝ | 17 | 5 |
| | | 22.5 | 1.66 | 3.5 | | | |
| | | 45 | 3.22 | 4.4 | | | |
| 10" | 250 | 11.25 | 1.39 | 3.3 | ⅝ | 17 | 5 |
| | | 22.5 | 2.62 | 4.1 | | | |
| | | 45 | 4.97 | 4.1 | | | |
| 12" | 250 | 11.25 | 1.94 | 3.7 | ⅝ | 17 | 5 |
| | | 22.5 | 3.91 | 4.7 | | | |
| | | 45 | 6.69 | 5.7 | ⅞ | 24 | 7 |
| 14" | 250 | 11.25 | 2.62 | 4.1 | ⅝ | 17 | 5 |
| | | 22.5 | 5.26 | 5.2 | ¾ | 20 | 6 |
| | | 45 | 9.70 | 6.4 | 1 | 27 | 8 |
| 16" | 250 | 11.25 | 3.44 | 4.5 | ⅝ | 17 | 5 |
| | | 22.5 | 6.89 | 5.7 | ⅞ | 24 | 7 |
| | | 45 | 12.63 | 7.0 | 1⅛ | 30 | 9 |

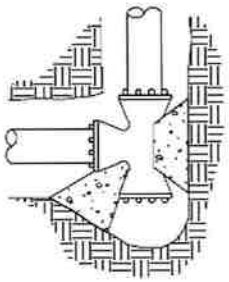

TEE

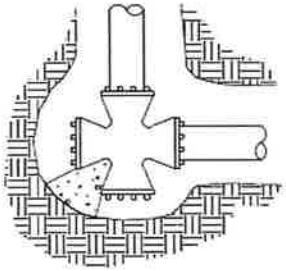

CROSS

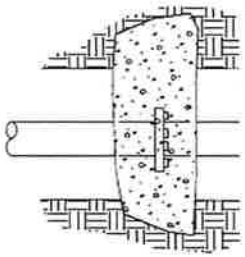

STRADDL

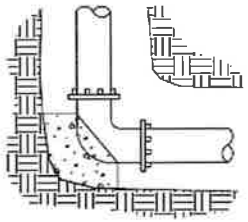

BEND

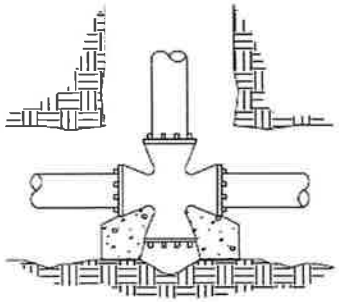

CROSS

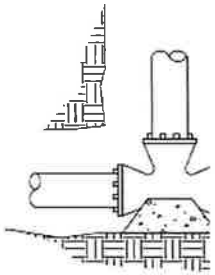

TEE

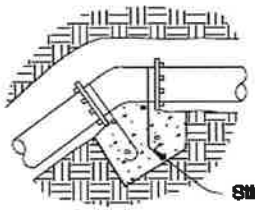


CONVEX VERTICAL BEND

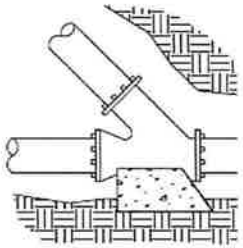

WYE

## DETERMINATION OF THRUST BLOCK BEARING AREA

NOTE: WHEN THRUST BLOCK BEARING AREA IS NOT SPECIFIED ON THE PLANS OR DETERMINED BY THE ENGINEER, USE THE FOLLOWING PROCEDURE TO DETERMINE REQUIRED BEARING AREA.

1. Determine thrust (T) for type of fitting or joint and size of pipe from Table.
2. Determine Design (Test) Pressure from Standard Specifications or Special Provisions.
3. Determine Table Pressure from Table.
4. Determine Soil Bearing Capacity (B) of soil from Table.
5. Determine required bearing area (A) in sq. ft. as follows:

$$A = \left(\frac{T}{B}\right)\left(\frac{\text{Design (Test) Pressure}}{\text{Table Pressure}}\right)$$

Example: Design (Test) Pressure = 150 PSI
Pipe = 14"
Fitting = Tee
Soil = Sand

From Table, T = 272.9 PSI
From Table, B = 14 PSI

$$A = \left(\frac{38485}{2000}\right)\left(\frac{150}{250}\right) = 11.55 \text{ sq ft}$$

GENERAL NOTES FOR ALL DETAILS:

1. Contractor to provide blocking adequate to withstand full test pressure.
2. Divide thrust by safe bearing load to determine required bearing area (A in sq ft) of concrete to distribute load.
3. Adjust bearing areas (A) for other pressure conditions. (See "Determination of Thrust Block Bearing Area" equation.
4. Pour concrete blocking against undisturbed earth.
5. All concrete shall be commercial grade concrete.
6. Wrap pipe and/or fittings with 2 layers of polyethylene film where in contact with concrete
7. Keep concrete clear of all joints and accessories.
8. Stirrups shall be deformed galvanized cold rolled steel AASHTO M31 (ASTM A615), Grade 60. Coat with coal tar epoxy after installation.

CALC. BOOK NO. _____

BASELINE REPORT DATE _____

NOTE: All material and workmanship shall the current Oregon Standard Specifi

*The selection and use of this Standard Drawing, while designed in accordance with generally accepted engineering principles and practices, is the sole responsibility of the user and should not be used without consulting a Registered Professional Engineer.*

OREGON STANDARD D

THRUST BLOCK

2008

| DATE | REVISION DESCR |
|---|---|
| | |

**Effective Date: June 1, 2009 - November 30, 2009**

# HYDRANT ASSEMBLY

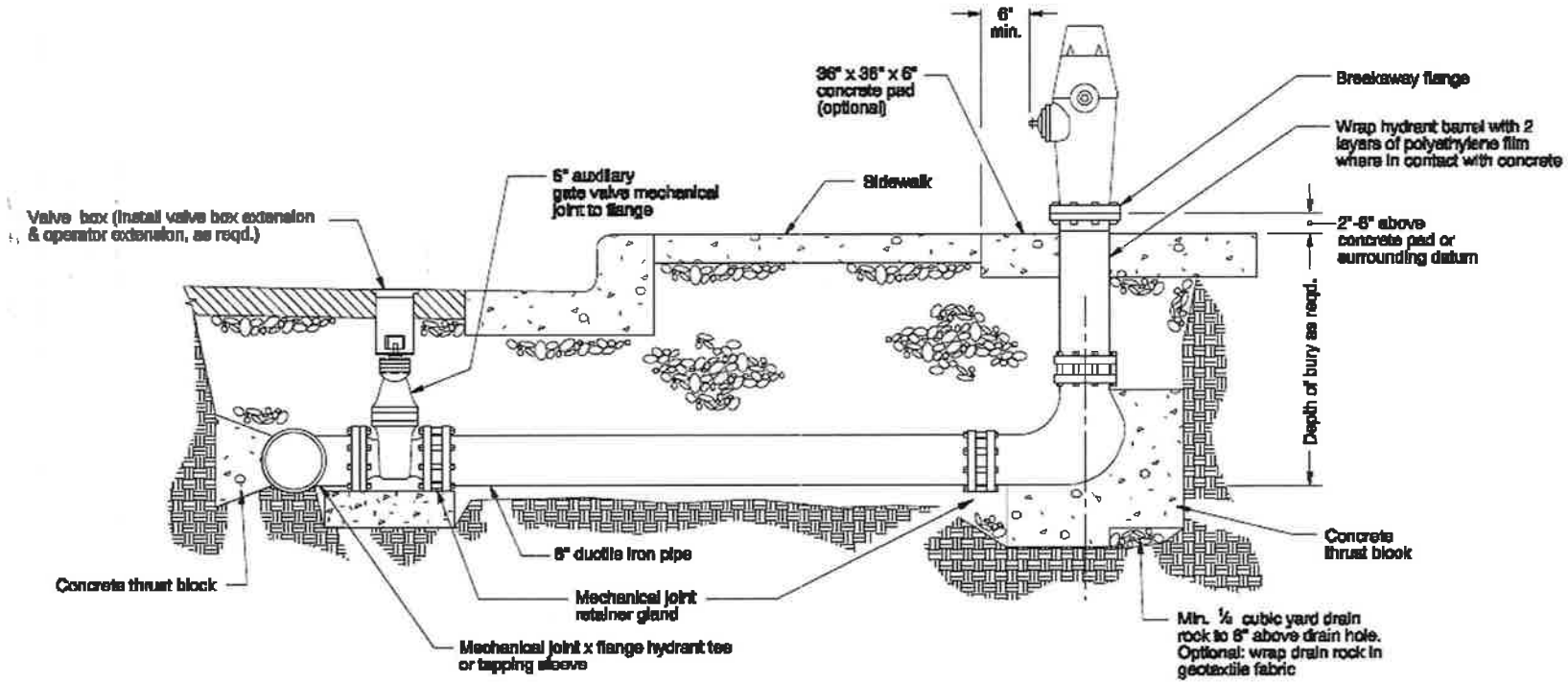


ENERAL NOTES FOR ALL DETAILS:

When pipe is shorter than 18', no joints allowed. Use mechanical joint retainer glands. Two ¾" galvanized tie rods may be used in lieu of thrust blocks for installations less than 18' long. Coat tie rods with two coats of coal tar epoxy.

When pipe is longer that 18' retainer glands not required.

There shall be a minimum of 18" horizontal clearance around hydrant.

When placed adjacent to curb, hydrant port shall be 24" from face of curb.

Concrete thrust blocks shall be constructed as per thrust blocking Std. Drg. RD250. Do not block drain holes

Extensions required for hydrant systems shall be installed to the manufacturer's specifications.

Hydrants shall be placed to provide a minimum of 5' clearance from driveways, poles, and other obstructions.

Hydrant pumper port shall face direction of access.

Set hydrant plumb in all directions.

CALC. BOOK NO. _____ BASELINE REPORT DATE _____

NOTE: All material and workmanship shall the current Oregon Standard Specifi

*The selection and use of this Standard Drawing, while designed in accordance with generally accepted engineering principles and practices, is the sole responsibility of the user and should not be used without consulting a Registered Professional Engineer.*

OREGON STANDARD D

HYDRANT INSTALL

2008

| DATE | REVISION DESCR |
|---|---|
| | |
| | |
| | |
| | |

**Effective Date: June 1, 2009 - November 30, 2009**

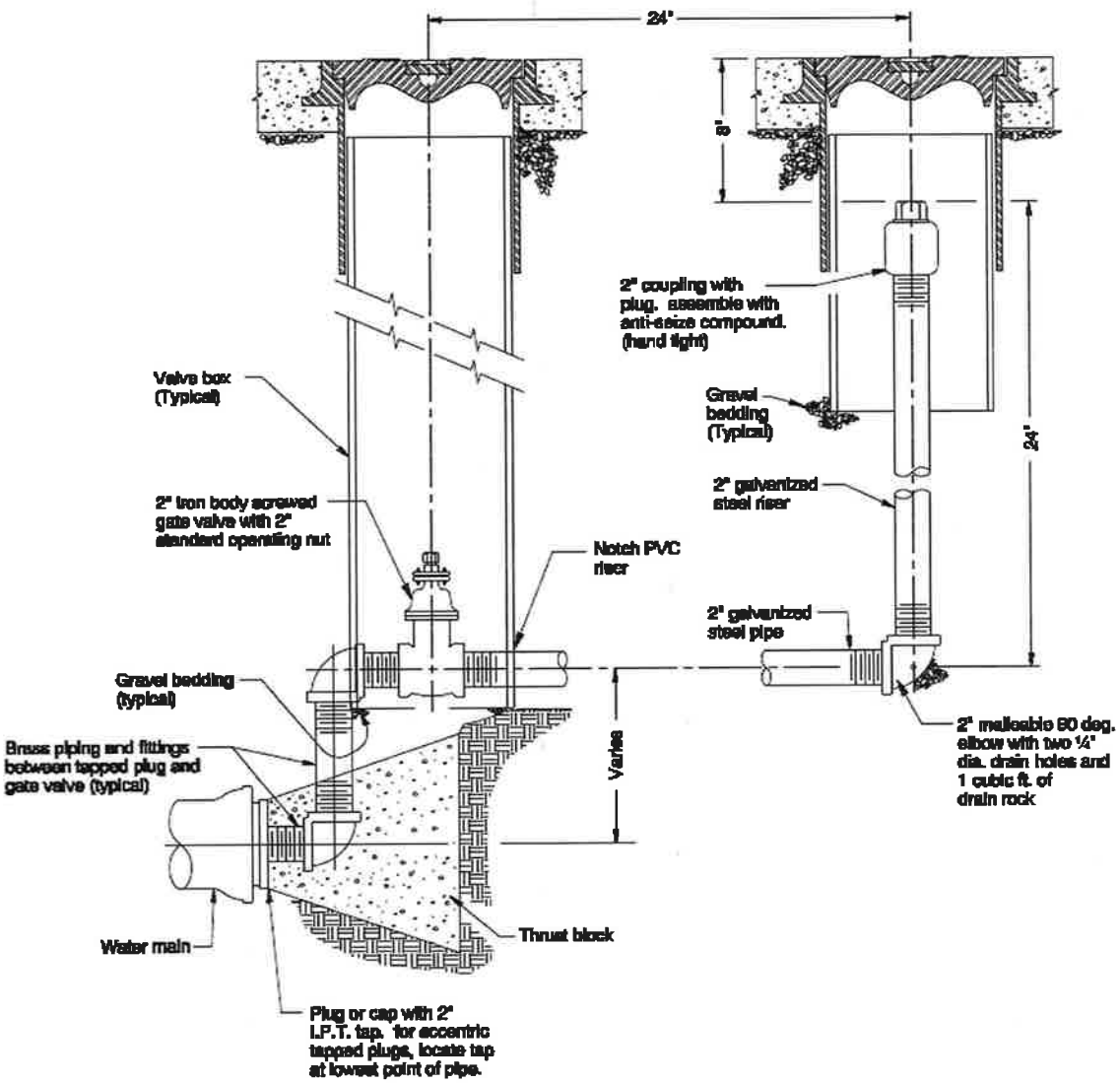


GENERAL NOTES FOR ALL DETAILS:

1. Wrap main and fittings in thrust block zone with two layers of poly to facilitate future removal.
2. In lieu of concrete thrust block, restrain pipe or pour concrete str

CALC. BOOK NO. _____

BASELINE REPORT DATE _____

NOTE: All material and workmanship shall the current Oregon Standard Speci

*The selection and use of this Standard Drawing, while designed in accordance with generally accepted engineering principles and practices, is the sole responsibility of the user and should not be used without consulting a Registered Professional Engineer.*

OREGON STANDARD D

TYPICAL MAIN DEA
BLOWOFF ASSE

2008

| DATE | REVISION DESCR |
|---|---|
| | |
| | |
| | |
| | |

**Effective Date: June 1, 2009 - November 30, 2009**

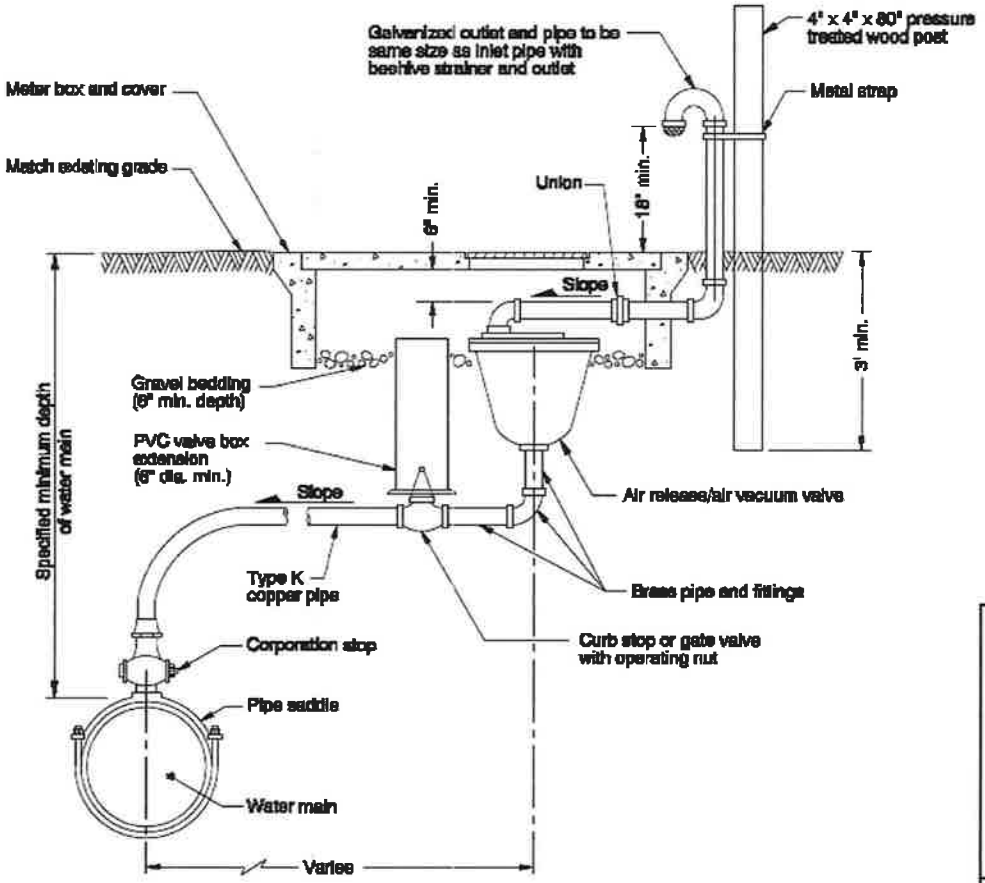


GENERAL NOTES FOR ALL DETAILS:

1. Air release/air vacuum valve shall be size specified in Contract. Piping and valves to be same size as combination air release/air va
2. Locate at high point of main.
3. Tap top of main.
4. Provide insulation and additional depth when specified for freeze p

CALC. BOOK NO. _____

BASELINE REPORT DATE _____

NOTE: All material and workmanship shall the current Oregon Standard Specifi

*The selection and use of this Standard Drawing, while designed in accordance with generally accepted engineering principles and practices, is the sole responsibility of the user and should not be used without consulting a Registered Professional Engineer.*

OREGON STANDARD D

**COMBINATION AIR R AIR VACUUM VALVE A (2" AND SMALL**

2008

| DATE | REVISION DESCR |
|---|---|
| | |

**Effective Date: June 1, 2009 - November 30, 2009**

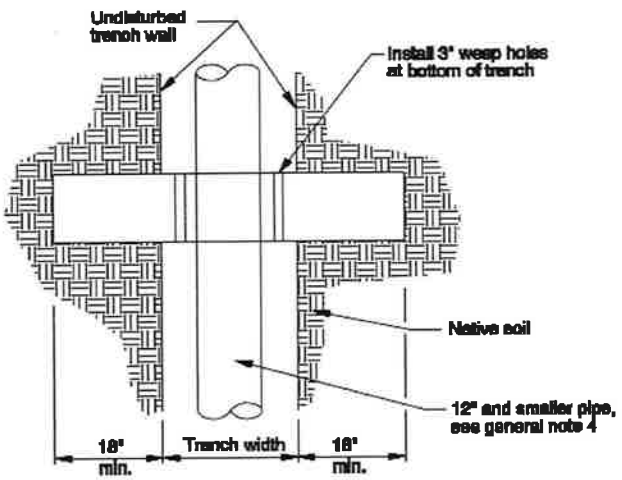


PLAN

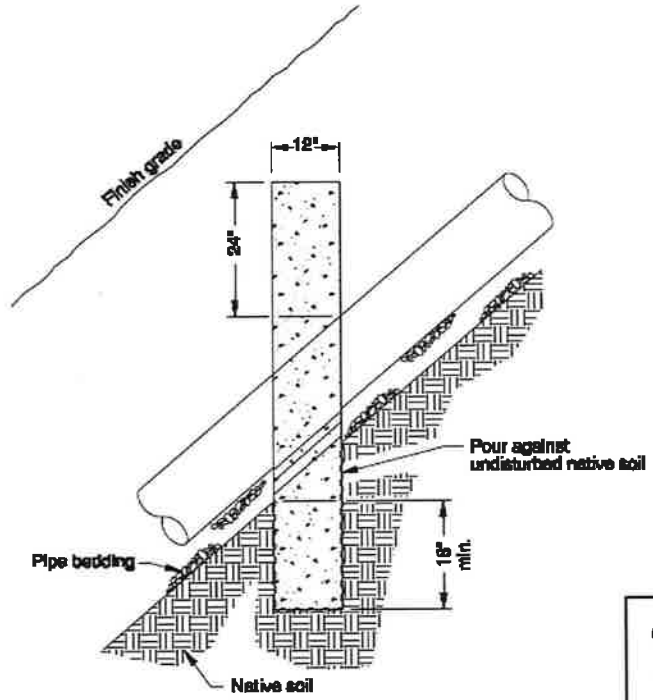


ELEVATION

GENERAL NOTES FOR ALL DETAILS:

1. Concrete pipe anchors shall be constructed using forms when sewe drains and other pipelines are constructed with slopes 20% or great Remove forms prior to backfilling trench.
2. All concrete shall be commercial grade concrete.
3. Spacing of concrete pipe anchors shall be:

| SLOPE | SPACING (on slope) |
|---|---|
| 20-34% | 35' |
| 35-50% | 25' |
| 50+ % | 15' or concrete encasement |

4. Dimensions for embedment for pipes larger than 12" shall be appro engineer.

CALC. BOOK NO. _____

BASELINE REPORT DATE _____

NOTE: All material and workmanship shall the current Oregon Standard Speci

*The selection and use of this Standard Drawing, while designed in accordance with generally accepted engineering principles and practices, is the sole responsibility of the user and should not be used without consulting a Registered Professional Engineer.*

OREGON STANDARD D

CONCRETE PIPE AN

2008

| DATE | REVISION DESCR |
|---|---|
| | |
| | |
| | |
| | |

**Effective Date: June 1, 2009 - November 30, 2009**

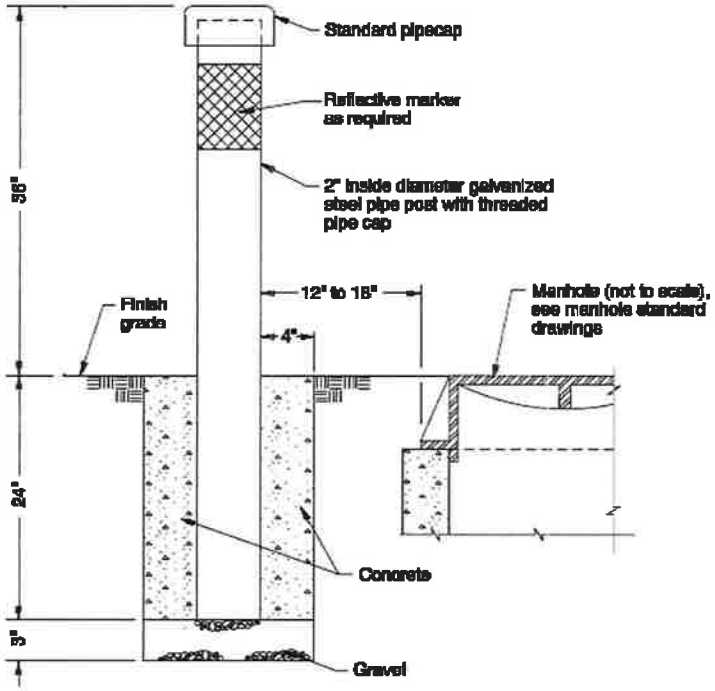


LOCATOR POST AT MANHOLE OR CLEANOUT

| American Public Works Association Uniform Color Code | |
|---|---|
| RED | Electric power lines, cables or conduits, and lighting cables. |
| YELLOW | Gas, oil, steam, petroleum or other hazardous liquid or gaseous materials. |
| ORANGE | Communications, cable TV, alarm or signal lines, cables, or conduits. |
| BLUE | Water, irrigation, and slurry lines. |
| GREEN | Sewers, storm sewer facilities, or other drain lines. |
| WHITE | Proposed excavation |
| PINK | Temporary survey markings. |
| PURPLE | Reclaimed water, irrigation and slurry lines. |

GENERAL NOTES FOR ALL DETAILS:

1. As directed the locator post shall be located on the straight side of m
2. Posts shall be set in commercial grade concrete.
3. As an alternative, a 4" concrete filled PVC pipe locator post may be approved.
4. As an alternative, a flexible, durable, plastic marker may be used, if
5. Posts shall be painted color as directed.

CALC. BOOK NO. _____

BASELINE REPORT DATE _____

NOTE: All material and workmanship shall the current Oregon Standard Specifi

*The selection and use of this Standard Drawing, while designed in accordance with generally accepted engineering principles and practices, is the sole responsibility of the user and should not be used without consulting a Registered Professional Engineer.*

OREGON STANDARD D

LOCATOR POS

2008

| DATE | REVISION DESCR |
|---|---|
| | |

**Effective Date: June 1, 2009 - November 30, 2009**

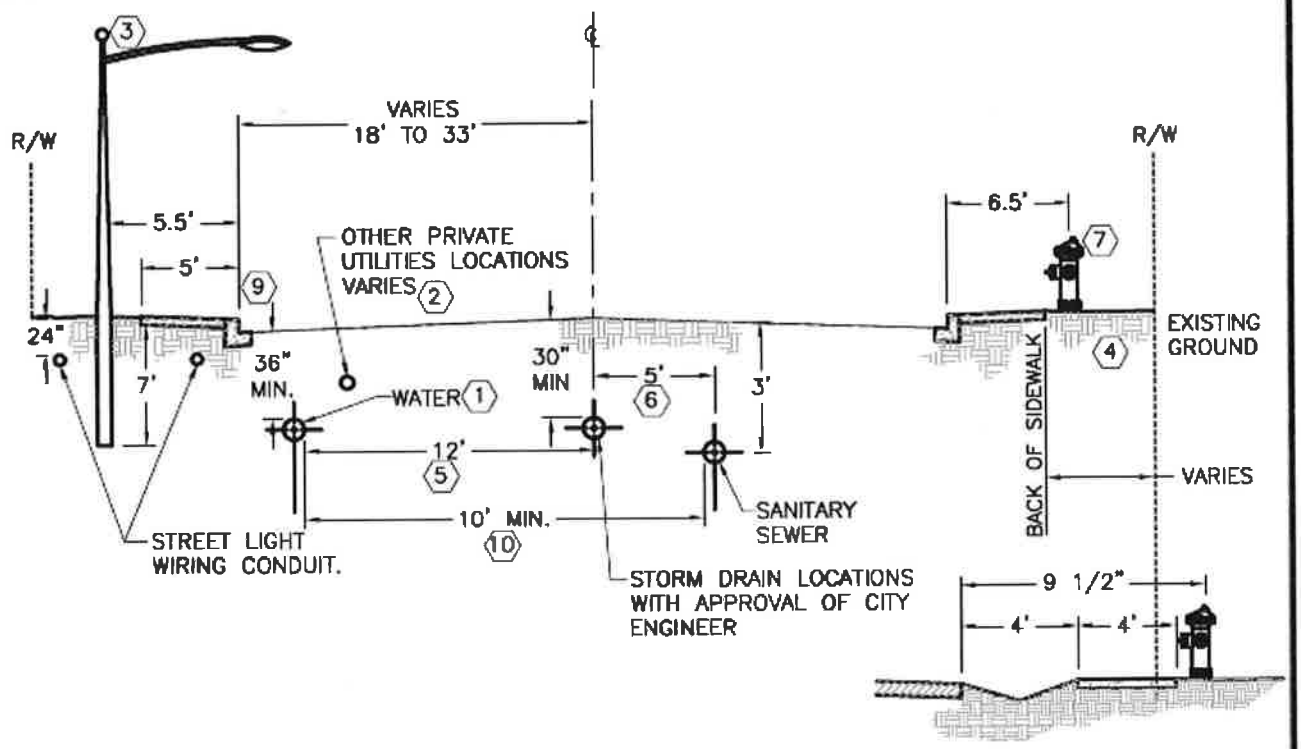


## LOCAL STREET

NOTES:

1. DEVELOPER OR CONTRACTOR IS REQUIRED TO CALL 1-800-424-5555 A MINIMUM OF 48 HOURS PRIOR TO DIGGING WITHIN THE LIMITS OF CITY RIGHT-OF-WAY FOR THE LOCATION MARKING OF ALL UNDERGROUND UTILITIES.
2. TYPICAL LOCATIONS FOR OTHER PROPOSED OR EXISTING PUBLIC UTILITIES SHALL BE VERIFIED BY THE DEVELOPER OR CONTRACTOR. A MINIMUM HORIZONTAL SEPARATION OF 3 FOOT SHALL BE MAINTAINED FROM CITY WATER MAINS AND A MINIMUM 5 FOOT HORIZONTAL SEPARATION SHALL BE MAINTAINED FROM CITY SEWER AND STORM SEWER MAINS.
3. STREET LIGHT POLES TYPICALLY WILL BE INSTALLED ON ALTERNATING SIDES OF THE STREET AND SPACED AS INDICATED BY ENGINEER.
4. WATER METER BOXES WILL BE INSTALLED AT THE BACK OF NEW OR EXISTING SIDEWALKS. NO METER SHALL BE ALLOWED IN SIDEWALK.
5. POTABLE WATER LINES TYPICALLY SHALL BE INSTALLED 12 FEET FROM AND PARALLEL TO THE CENTERLINE OF THE RIGHT-OF-WAY ON THE SOUTH OR EAST SIDE.
6. SANITARY SEWER LINE TYPICALLY SHALL BE INSTALLED 5 FEET FROM AND PARALLEL TO THE CENTERLINE OF THE RIGHT-OF-WAY ON THE NORTH OR WEST SIDE.
7. FIRE HYDRANTS TYPICALLY WILL BE INSTALLED ON ALTERNATING SIDES OF THE STREET ON 300 FOOT SPACING IN INDUSTRIAL AND COMMERCIAL AREAS AND ON 500 FOOT SPACING IN RESIDENTIAL AREAS.
8. IF CONFLICTS REQUIRE ALTERNATE WATER OR SEWER MAIN LOCATIONS, APPROVAL SHALL BE OBTAINED FROM THE CITY ENGINEER FOR THE LOCATION. A MINIMUM 3 FOOT SEPARATION FROM THE FACE OF CURB IS REQUIRED. THE WATERLINE DEPTH IS A MINIMUM OF 36".
9. MINIMUM VERTICAL CLEARANCE BETWEEN WATER AND SEWER SHALL BE A MINIMUM OF 18". MINIMUM CLEARANCE BETWEEN HORIZONTAL WATER AND SEWER SHALL BE A MINIMUM OF 10'.
10. WATER VALVES ARE REQUIRED TO BE ASSOCIATED WITH WATER MAIN FITTINGS. VALVE PLACEMENT SHALL BE ALIGNED WITH RIGHT-OF-WAY LINES. THE NUMBER OF VALVES BE DETERMINED BY SUBTRACTING ONE (1) FROM THE NUMBER OF BRANCHES OF FITTING. THE VALVES ARE TO BE PRIMARILY LOCATED ON THE MAINS THAT HAVE WATER SERVICES.
11. UTILITY CROSSINGS TO BE STAMPED ON CURB.
12. IRRIGATION LINES (CITY OWNED) TYPICALLY SHALL BE INSTALLED 2 FEET FROM AND PARALLEL TO THE RIGHT-OF-WAY LINE. IRRIGATION BOXES SHALL BE LOCATED ON THE OPPOSITE LOT CORNER FROM THE WATER METER BOX. NO BOX SHALL BE ALLOWED IN THE SIDEWALK OR DRIVEWAYS. IRRIGATION VALVES ARE REQUIRED TO BE ASSOCIATED WITH THE IRRIGATION MAIN FITTINGS AS A MINIMUM. VALVE PLACEMENT SHALL BE OUTSIDE OF ASPHALT/CONCRETE AS CLOSE TO FITTING AS POSSIBLE.
13. FENCING SHALL NOT BE INSTALLED SO AS TO INHIBIT THE SIGH TRIANGLE OF ACCESS TO ANY CITY UTILITY.
14. ALL CITY UTILITY TRENCHES SHALL BE COMPACTED TO 98% AND VERIFIED BY TESTING AGENCY.

# TYPICAL UTILITY LOCATIONS

CITY OF HERMISTON

STANDARD PLAN

U01

APPROVED: _____ CITY ENGINEER

DATE: